ZIPP®

Passion For Innovation

Industrial power tools for:

Shipyard / Solar Energy / Construction / Petrochemical

Assembly Line / Mining Industry / Aviation Industry

Casting Foundry / Fabrication Shop / Automotive Service

Railway Construction

www.zippgroup.com

At ***ZIPP***, we take great pride in being a leading manufacturer and supplier of high-quality, ergonomic, and durable tools for professionals across various industries worldwide. Our ISO 9001:2015 certification ensures that our products meet strict quality standards, while our focus on innovation and customer satisfaction allows us to stay ahead of the competition.

With years of experience in manufacturing and exporting professional and industrial-grade tools, we have become a trusted partner for companies across various industries, including automotive service, production, assembly line, construction, aviation, and aerospace. Our product line includes an extensive range of CE-certified tools, including professional automotive servicing air tools, industrial air tools, construction air tools, blind fastening systems and tools, and torque control systems and tools.

We are committed to creating only the best tools and accessories that exceed quality, precision, and performance expectations. Our dedication to excellence is evident in everything we do, from our extensive product testing to our exact attention to detail and superior industrial quality. As a result, our trademarked ZIPP logo is recognized worldwide as a symbol of trust and reliability.

Integrity, Respect, and Teamwork are the core values that drive us at ***ZIPP***. We believe in always acting with the highest level of integrity, respecting our employees and customers, and working together to achieve our goals. By embracing these values, we have built a strong foundation for long-term growth and product integrity, allowing us to continually deliver superior tools that make work more accessible and ergonomic.

We are always looking for ways to serve our customers better. Whether you need more information about our company or products or want us to build a customized tool for your specific requirements, our professional sales team is always ready to assist you. Contact us to learn more.

Choose ***ZIPP*** for quality, innovation, and reliability – we look forward to serving you!

Warranty Policy

The ***ZIPP*** warranty covers the original user against defective material or workmanship for one year from the date of purchase on repair parts and labor. The warranty is limited to the repair or replacement of defective parts.

ZIPP reserves the right to determine whether the part or parts failed due to defective material, workmanship, or other causes. This warranty does not cover failures caused by accident, alteration, and misuse.

A ***ZIPP*** Authorized Service Center or ***ZIPP***'s Agent/Distributor must perform all warranty repairs. Any repair to the equipment other than by these authorized facilities will void this warranty.

Conversion Table

PRESSURE				
Pa	MPa	bar	psi	Kg/cm^2
1,000,000	1	10	145	10.197
100,000	0.1	1	14.5	1.0197
6,890	0.00689	0.0689	1	0.0703
98,070	0.09807	0.9807	14.223	1
620,000	0.62	6.2	90	6.3

psi>>kg/cm^2: 90psi x 0.0703= 6.327kg/cm^2
bar>>psi: 7bar x 14.5= 101.5psi

FLOW RATE			
m^3/min	cfm	l/min	l/s
1	35.317	1,000	16.668
0.0283	1	28.3168	0.4719
0.001	0.035	1	1.0165
0.061	2.1189	60.606	1

cfm>>l/min: 10cfm x 28.3168= 283.168 l/min
m^3/min>>cfn: 10m^3/min x 35.317= 353.17cfm

Po: PSI
SCFM= CFM*((Po+14.7)/14.7)

WEIGHT OR FORCE		
lb	kg	N
1	0.4536	4.4484
2.2046	1	9.807
0.2248	0.102	1

kg>>N: 10kg x 9.807= 98.07N
N>>kg: 10N x 0.102= 1.02kg

TORQUE				
N-m	Kg-m	Kg-cm	ft-lb	in-lb
1	0.102	10.1972	0.7376	8.8507
9.8067	1	100	7.233	86.77
0.0986	0.01	1	0.0723	0.8677
1.3558	0.1383	13.83	1	12

N-m>>ft-lb: 10N-m x 0.7376= 7.376 ft-lb
N-m>>kg-m: 10N-m x 0.102= 1.02 kg-m

LENGTH			
mm	m	inch	ft
1	0.01	0.03941	0.0033
1,000	1	39.37	3.2809
25.4	0.0254	1	0.0833
304.8	0.3048	12	1

mm>>inch: 10mm x 0.0394= 0.394 inch
Inch>>mm: 10inch x 25.4= 254mm

POWER	
KW	HP
1	1.341
0.746	1

HP>>KW: 10HP x 0.746= 7.46KW

Gear Inspection Center

HBM Torque Calibration Center

Patents

2.5D Video Measurement System

3D Video Measurement System

Patents

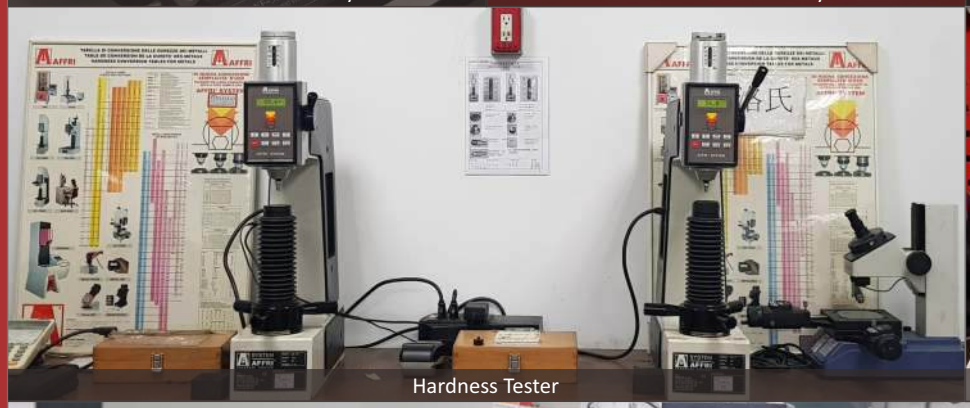
Hardness Tester

MAGTROL Hysteresis Dynamometers

CNC Machining Center

CNC Machining Center

CONTENTS

Fastening

1 Impact Wrench
7 Right Angle Wrench
8 Mini Impact Wrench
10 Composite Impact Wrench
12 Twin Turbo Air Impact Wrench
14 Torque Wrench
15 Ratchet Wrench
19 Mini Ratchet Wrench
20 Air Open-end Wrench
23 Impact Driver
24 Torque Control Screwdriver
27 Oil Pulse Tool
33 USA Made Pneumatic Torque Wrench
34 USA Made Hydraulic Square Drive Wrench
35 USA Made Hydraulic Direct Fit Wrench
37 USA Made Hydraulic Tensioner
64 Hydraulic Square Drive Wrench
68 Hydraulic Direct Fit Wrench
89 Air Hydraulic Blind Rivet Installation Tool
102 Aviation Nut-Plate Installation Tool
103 Aviation Blind Rivet Installation Tool
105 Aviation Lock Bolt & Blind Bolt Installation Tools
107 Aviation Split type Lock Bolt & Blind Bolt Installation Tool
110 Air Hydraulic Rivet Nut / Rivet Stud Installation Tool
113 Air Hydraulic Lock Bolt Installation Tool
117 Split type Air Hydraulic Blind Rivet / Rivet Nut / Lock Bolt Installation Tool
119 Spin-Spin type Rivet Nut Installation Tool
122 Speed Riveter
127 Compression Rivet Squeezer
129 USA Made Pneudraulic Squeezer

Cutting / Grinding / Riveting

39 USA Made Hydraulic Nut Splitter
58 Hydraulic Nut Splitter / Hydraulic Wedgie and Spread Cylinder
137 Shock Reduced Air Hammer
140 Riveting Hammer
141 Shock Reduced Riveting Hammer / Bucking Bar
146 Vibration Reduced Air Saw
154 Metal Shear / Scissors
155 Pruning Shear
156 Industrial Drill / Rivet Removal Tool
161 Industrial Right Angle Drill
164 Die Grinder / Angle Die Grinder
170 Low Noise Series Tool
172 Micro Die Grinder
173 Angle Cutter / Nibbler
176 Angle Grinder
177 Cut Off Tool
178 Reversible Series Tool
179 Laser Welding Removal Tool
210 Robot Arm / Tapping Tool
214 Industrial Angle Grinder
215 Industrial Vertical Grinder
216 Industrial Straight Grinder

Surface Finishing

151 Vibration Reduced Air Lapper / File
159 Air Eraser / Tire Buffer
180 Rust & Paint Removal Tool
182 Spot Repair Sander
184 Sander / Polisher
236 Storm Cleaning Gun / Foam Gun

CONTENTS

Construction

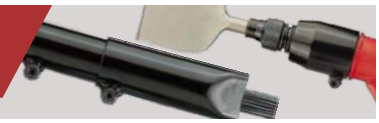

40 Hydraulic Single Acting Cylinder
59 Hydraulic Spreader
61 Hydraulic Vertical Lifting Wedge
62 Hydraulic Fixed Flange Alignment Tool
72 Hydraulic Hand Pump
75 Hydraulic / Water Manual Pump
76 Hydraulic Air Pump
77 Hydraulic Electric Pump
81 High Pressure Manual Pump
82 High Pressure Hydraulic Electric Pump
84 Hydraulic Electric Pump for Torque Wrench
85 Hydraulic Air Pump for Torque Wrench
88 USA Made Hydraulic Pump
217 Needle Scaler / Chisel Scaler
223 Hand Held Scaling Hammer
224 Long Reach Air Scraper
227 Air Rammer
228 Chipping Hammer
229 Shock Reduced Chipping Hammer
230 Concrete Breaker
231 USA Made Chipping Hammer / Clay Digger
232 USA Made Rivet Buster
233 USA Made Hammer Drill / Rock Drill
234 USA Made Pavement Breaker
235 USA Made Back Fill Tamper / Trench Digger

Electric Power

238 Cordless Riveter
239 Cordless Drill With / Driver With Torque Control / Hammer Drill
240 Cordless Impact Driver / Angle Grinder
241 Cordless Impact Wrench
242 LED Work Light
245 Cordless Torque Control Screwdriver
248 ECB series Torque control Impact & Pulse wrench
249 DC Random Orbital Sander

Accessories

79 Hydraulic Coupler
80 Hydraulic Hoses
109 Blind Rivet / Rivet Nut Adapter
125 Blind Rivet / Rivet Stud / Lock Bolt Installation Tool Selection Chart
126 Rivet Nut Installation Tool Selection Chart
131 CP214 Compatible Yoke
135 Rivet Squeezer Accessories
144 Rivet Chisels / Retainers
153 Saw Blades / Files
202 Air Sander Accessories
207 Industrial Anti-Vibration Sander Pad
226 Dimensions and Accessories
250 Universal Swivel Air inlet Joint
252 Spring Balancer
255 F.R.L. Unit / Auto Drain
256 Display Stand

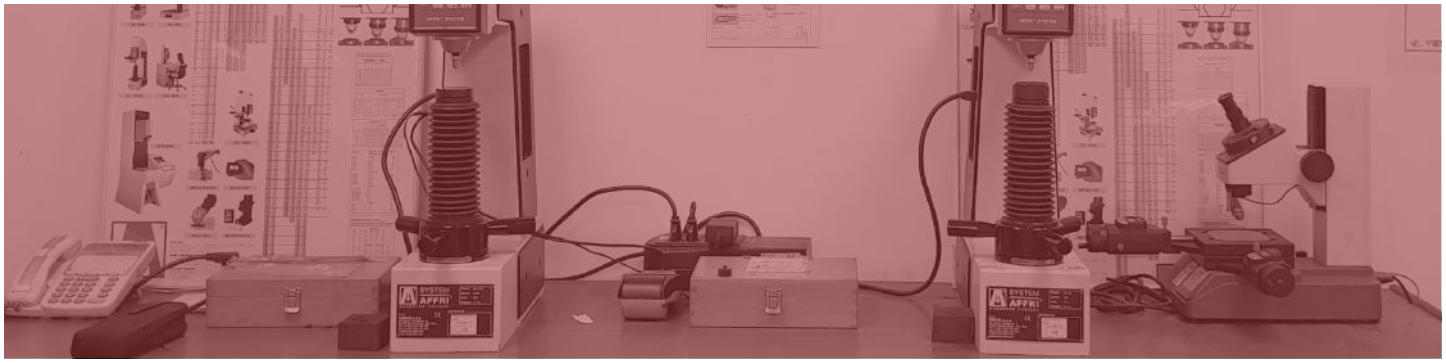

Air Impact Wrench

ZIW1038 twin hammer mechanism
1" Impact wrench
ZIW1038-6 twin hammer mechanism
1" Impact wrench w/6" extension

ZIW1075 Pinless mechanism
1" Impact wrench
ZIW1075-8 Pinless mechanism
1" Impact wrench w/8" extension

ZIW1076 Pinless mechanism
1-1/2" Impact wrench

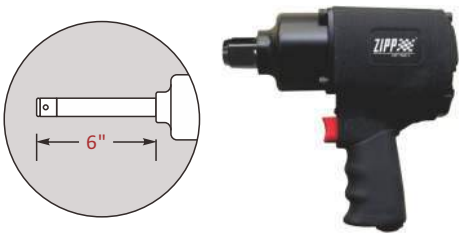

ZIW812 Rear Exhaust
1" Impact wrench
ZIW812L Rear Exhaust
1" Impact wrench w/6" extension

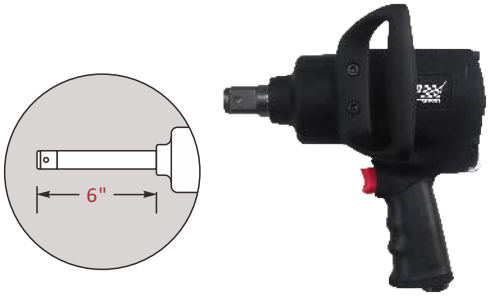

ZIW818 Rear Exhaust
1" Impact wrench
ZIW818L Rear Exhaust
1" Impact wrench w/6" extension

New Twin Hammer Design

- Adjustable 3 stages speed for Forward/Reverse
- Use for heavy automotive and truck repair, construction or assembly line.
- With new twin hammer design and hot forged alloy steel made Hammer cage & Anvil to create more torque and 3 times longer life span than traditional design.

Model	Square Drive inch(mm)	Free Speed rpm	Max. Torque (15 secs) ft-lb(Nm)	Working torque (5 secs) ft-lb(Nm)	Avg. Air Cons. cfm(l/min)	Net Weight lbs(kgs)	Air Inlet Size inch-NPT/PT	Impact mechanism
ZIW1038	1(25)	3600	2300(3118)	2000(2712)	11(311)	23.6(10.7)	1/2	Twin Hammer
ZIW1038-6	1(25)	3600	2300(3118)	2000(2712)	11(311)	25.8(11.7)	1/2	Twin Hammer
ZIW1075	1(25)	3500	2600(3525)	2300(3118)	12(339)	31.7(14.4)	1/2	Pin Less
ZIW1075-8	1(25)	3500	2600(3525)	2300(3118)	12(339)	35.7(16.2)	1/2	Pin Less
ZIW1076	1-1/2(38)	4000	2600(3525)	2300(3118)	12(339)	31.3(14.2)	1/2	Pin Less
ZIW812	1(25)	6000	1200(1627)	1000(1356)	24.7(700)	9.35(4.25)	1/4	Twin Hammer
ZIW812L	1(25)	6000	1200(1627)	1000(1356)	24.7(700)	11.3(5.13)	1/4	Twin Hammer
ZIW818	1(25)	4500	1800(2400)	1600(2169)	11.3(320)	11.88(5.5)	3/8	Twin Hammer
ZIW818L	1(25)	4500	1800(2400)	1600(2169)	11.3(320)	13.61(6.3)	3/8	Twin Hammer

Air Impact Wrench

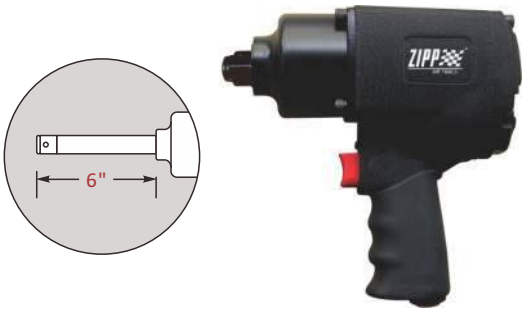

ZIW611 Rear Exhaust
3/4" Impact wrench
ZIW611L Rear Exhaust
3/4" Impact wrench w/6" extension

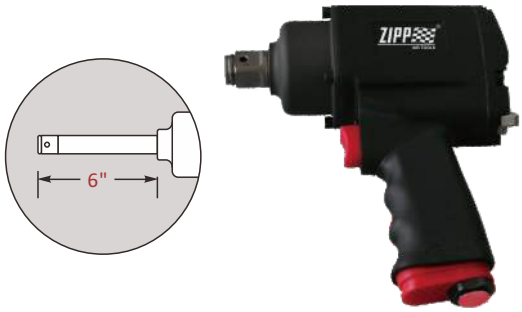

ZIW6511 Rear Exhaust
3/4" Impact wrench
ZIW6511L Rear Exhaust
3/4" Impact wrench w/6" extension

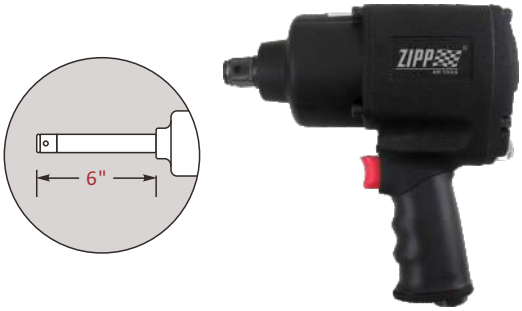

ZIW6514 Rear Exhaust
3/4" Impact wrench
ZIW6514L Rear Exhaust
3/4" Impact wrench w/6" extension

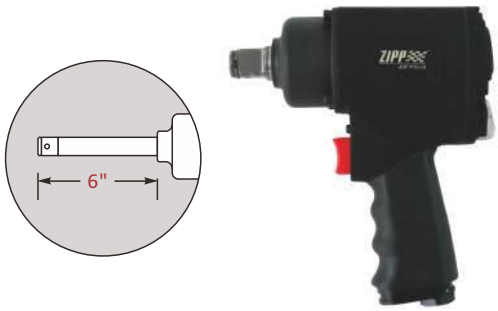

ZIW685 Rear Exhaust
3/4" Impact wrench
ZIW685L Rear Exhaust
3/4" Impact wrench w/6" extension

New Twin Hammer Design

- Adjustable 3 stages speed for Forward/Reverse
- Use for heavy automotive and truck repair, construction or assembly line.
- With new twin hammer design and hot forged alloy steel made Hammer cage & Anvil to create more torque and 3 times longer life span than traditional design.

Model	Square Drive inch(mm)	Std. Bolt Size inch(mm)	Free Speed rpm	Max. Torque (10 secs) ft-lb(Nm)	Working torque (5 secs) ft-lb(Nm)	Avg. Air Cons. cfm(l/min)	Net Weight lbs(kgs)	Air Inlet Size inch-NPT/PT
ZIW611	3/4(19)	1-1/2(38)	6000	1100(1492)	900(1220)	24.7(700)	9.13(4.15)	1/4
ZIW611L	3/4(19)	1-1/2(38)	6000	1100(1492)	900(1220)	24.7(700)	10.45(4.75)	1/4
ZIW6511	3/4(19)	1-1/4(32)	7200	1100(1492)	850(1153)	8.12(230)	5.8(2.64)	1/4
ZIW6511L	3/4(19)	1-1/4(32)	7200	1100(1492)	850(1153)	8.12(230)	7(3.2)	1/4
ZIW6514	3/4(19)	1-1/2(38)	4500	1400(1898)	1100(1492)	26.4(747)	11(5)	1/4
ZIW6514L	3/4(19)	1-1/2(38)	4500	1400(1898)	1100(1492)	26.4(747)	12.9(5.87)	1/4
ZIW685	3/4(19)	1-9/64(29)	7500	850(1153)	650(881)	7.42(210)	5.61(2.55)	1/4
ZIW685L	3/4(19)	1-9/64(29)	7500	850(1153)	650(881)	7.42(210)	6.78(3.08)	1/4

- Operating Air Pressure: 90(6.2) psi(bar)
- Min. Hose Size: 3/8(10) inch(mm)

Products and specifications subject to change without prior notice

Air Impact Wrench

1000 FT-LB

ZIW4100 Rear Exhaust

1/2" Impact wrench

Noise: 94dB(A), Vibration: 2.5(m/s²)

ZIW4100Q Rear Exhaust

1/2" Impact wrench-Low noise

Noise: 85dB(A), Vibration: 2.5(m/s²)

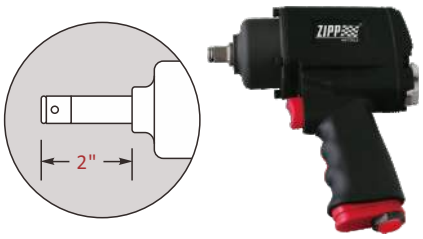

ZIW4510 Rear Exhaust

1/2" Impact wrench

ZIW4510L Rear Exhaust

1/2" Impact wrench w/2" extension

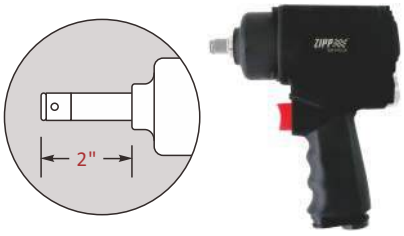

ZIW480 Rear Exhaust

1/2" Impact wrench

ZIW480L Rear Exhaust

1/2" Impact wrench w/2" extension

New Twin Hammer Design		● Adjustable 3 stages speed for Forward/Reverse ● Use for heavy automotive and truck repair, construction or assembly line. ● With new twin hammer design and hot forged alloy steel made Hammer cage & Anvil to create more torque and 3 times longer life span than traditional design.

ZIW465 Front Exhaust

1/2" Impact Wrench

ZIW465R Rear Exhaust

1/2" Impact Wrench

New Twin Hammer Design

- Use for heavy automotive and truck repair, construction or assembly line.
- With new twin hammer design and hot forged alloy steel made Hammer cage & Anvil to create more torque and 3 times longer life span than traditional design.

ZIW465K / ZIW465RK

- ZIW465R Impact Wrench X 1
  OR ZIW465 Impact Wrench X 1
- 1/2" sockets X5
  (14,16,17,19,22mm)
  OR (15/16,7/8,3/4,5/8,1/2inch)
- 5mm hex. wrench
- 3" extension anvil

Model	Square Drive inch(mm)	Std. Bolt Size inch(mm)	Free Speed rpm	Max. Torque (10 secs) ft-lb(Nm)	Working torque (5 secs) ft-lb(Nm)	Avg. Air Cons. cfm(l/min)	Net Weight lbs(kgs)	Air Inlet Size inch-NPT/PT
ZIW4100	1/2(12.7)	29/32(23)	9000	1000(1356)	750(1017)	5.1(144)	3.89(1.8)	1/4
ZIW4100Q	1/2(12.7)	29/32(23)	7000	1000(1356)	750(1017)	5.1(144)	3.89(1.8)	1/4
ZIW4510	1/2(12.7)	1-9/64(29)	7200	1000(1356)	750(1017)	8.12(230)	5.7(2.6)	1/4
ZIW4510L	1/2(12.7)	1-9/64(29)	7200	1000(1356)	750(1017)	8.12(230)	5.94(2.7)	1/4
ZIW480	1/2(12.7)	1-1/16(27)	7500	800(1085)	600(814)	7.42(210)	5.5(2.5)	1/4
ZIW480L	1/2(12.7)	1-1/16(27)	7500	800(1085)	600(814)	7.42(210)	5.72(2.6)	1/4
ZIW465	1/2(12.7)	3/4(19)	8000	450(610)	380(515)	7.7(220)	5.7(2.6)	1/4
ZIW465R	1/2(12.7)	3/4(19)	7000	450(610)	380(515)	7(200)	5.7(2.6)	1/4

- Operating Air Pressure: 90(6.2) psi(bar)
- Min. Hose Size: 3/8(10) inch(mm)

Air Impact Wrench

ZIW440 Rear Exhaust

1/2" Mini Impact Wrench

ZIW335 Rear Exhaust

3/8" Mini Impact Wrench

New Twin Hammer Design		
		● Adjustable 3 stages speed for Forward/Reverse ● Most power and compact, deliver best Power-to-Size ratio in this class ● Use for heavy automotive and truck repair, construction or assembly line. ● With new twin hammer design and hot forged alloy steel made Hammer cage & Anvil to create more torque and 3 times longer life span than traditional design.

ZIW305 Rear Exhaust

3/8" Impact Wrench

ZIW304S Side Exhaust

3/8" Straight Impact Wrench

ZIW344 Rear Exhaust

3/8" Air Impact Wrench

Twin Hammer		Twin Hammer (ZIW344)	
	● Two Hammer Design ● Forward/Reverse ● Use for general automotive repair or assembly line.	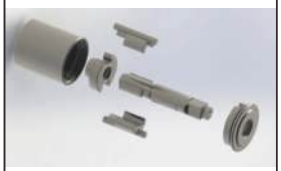	● Double-Chamber 9 vanes motor provides the highest output power comparing with conventional motor for the highest productivity. ● Double Pin Hammer mechanism. ● One piece front end plate & cylinder design to improve motor efficiency. ● User friendly side reverse switch.

Model	Square Drive inch(mm)	Std. Bolt Size inch(mm)	Free Speed rpm	Max. Torque (10 secs) ft-lb(Nm)	Avg. Air Cons. cfm(l/min)	Net Weight lbs(kgs)	Air Inlet Size inch-NPT/PT	Min. Hose Size inch(mm)
ZIW440	1/2(12.7)	5/8(16)	11000	400(543)	7(200)	3.3(1.5)	1/4	3/8(10)
ZIW335	3/8(10)	9/16(14)	11000	350(475)	7(200)	3.3(1.5)	1/4	3/8(10)
ZIW305	3/8(10)	5/16(8)	8500	1 sec. 45(61)	5.6(160)	2.3(1.05)	1/4	1/4(6.35)
ZIW304S	3/8(10)	5/16(8)	8000	1 sec. 43(58)	5.6(160)	2.2(1)	1/4	1/4(6.35)
ZIW344	3/8(10)	5/16(8)	5000	44(60)	17.7(500)	2(0.93)	1/4	1/4(6.35)

● Operating Air Pressure: 90(6.2) psi(bar)

Products and specifications subject to change without prior notice

Air Impact Wrench

ZAW-412B2

Two Hammer Type | **Side Exhaust**

1/4" Air Wrench

ZAW-412B3

Two Hammer Type | **Side Exhaust**

3/8" Air Wrench

ZAW-417B

Two Hammer Type | **Rear Exhaust**

3/8" Air Wrench

ZAW-910B1

Two Hammer Type | **Rear Exhaust**

3/8" Air Wrench-with muffler

ZAW-410B

Two Hammer Type | **Side Exhaust**

3/8" Air Wrench

ZAW-421B3

Two Hammer Type | **Side Exhaust**

3/8" Air Wrench

ZAW-211B

Two Hammer Type | **Rear Exhaust**

1/2" Air Wrench

ZAW-241B

Two Hammer Type | **Side Exhaust**

1/2" Air Wrench

Model	Bolt Size Capacity	Free Speed rpm	Working Torque ft-lb(Nm)	Max. Torque ft-lb(Nm)	Avg. Air Cons. cfm(l/min)	Overall Length inch(mm)	Noise Level db(A)	Net Weight lbs(kgs)	Air Inlet Size inch-NPT/PT
ZAW-412B2	M8	11000	20(27)	26(35)	4.5(127)	7.01(178)	89	1.5(0.68)	1/4
ZAW-412B3	M8	11000	20(27)	26(35)	4.5(127)	7.01(178)	89	1.5(0.68)	1/4
ZAW-417B	M10	8000	59(80)	148(200)	7.5(212)	8.86(225)	90	2.36(1.07)	1/4
ZAW-910B1	M10	8000	59(80)	96(130)	6.5(184)	9.06(230)	80	2.65(1.2)	1/4
ZAW-410B	M10	8300	59(80)	148(200)	7.5(212)	7.48(190)	94	2.16(0.98)	1/4
ZAW-421B3	M10~M12	8000	66(90)	177(240)	10(283)	7.48(190)	97	2.34(1.06)	1/4
ZAW-211B	M12~M14	5500	118(160)	207(280)	8.5(240)	10.24(260)	85	3.75(1.7)	1/4
ZAW-241B	M16~M18	4400	236(320)	369(500)	10(283)	13(330)	95	7.5(3.4)	1/4

- Operating Air Pressure: 90(6.2) psi(bar)

Air Impact Wrench

ZAW-412LB2

Two Hammer Type | **Handle Exhaust**

1/4" Air Wrench

ZAW-412LB3

Two Hammer Type | **Handle Exhaust**

3/8" Air Wrench

ZAW-514LB2

Two Hammer Type | **Handle Exhaust**

1/4" Air Wrench

ZAW-514LB3

Two Hammer Type | **Handle Exhaust**

3/8" Air Wrench

ZAW-417SL1

Two Hammer Type | **Side Exhaust**

3/8" Air Wrench

ZAW-410LB

Two Hammer Type | **Side Exhaust**

3/8" Air Wrench

ZAW-517LB

Two Hammer Type | **Handle Exhaust**

3/8" Air Wrench

ZAW-421LB3

Two Hammer Type | **Side Exhaust**

3/8" Air Wrench

Model	Bolt Size Capacity	Free Speed rpm	Working Torque ft-lb(Nm)	Max. Torque ft-lb(Nm)	Avg. Air Cons. cfm(l/min)	Overall Length inch(mm)	Noise Level db(A)	Net Weight lbs(kgs)	Air Inlet Size inch-NPT/PT
ZAW-412LB2	M8	13000	20(27)	26(35)	7(198)	5.71(145)	88	1.98(0.9)	1/4
ZAW-412LB3	M8	13000	20(27)	26(35)	7(198)	5.71(145)	88	1.98(0.9)	1/4
ZAW-514LB2	M8	11500	20(27)	22(30)	6(170)	6.1(155)	87	1.98(0.9)	1/4
ZAW-514LB3	M8	11500	20(27)	22(30)	6(170)	6.1(155)	87	1.98(0.9)	1/4
ZAW-417SL1	M10	8000	59(80)	148(200)	8(226)	7.2(183)	94	2.65(1.2)	1/4
ZAW-410LB	M10	7700	59(80)	148(200)	7(198)	7.28(185)	89	2.87(1.3)	1/4
ZAW-517LB	M12	8000	74(100)	140(190)	10(283)	6.3(160)	87	2.65(1.2)	1/4
ZAW-421LB3	M12	8000	81(110)	177(240)	10(283)	7.28(185)	93	2.89(1.34)	1/4

- Operating Air Pressure: 90(6.2) psi(bar)

Products and specifications subject to change without prior notice

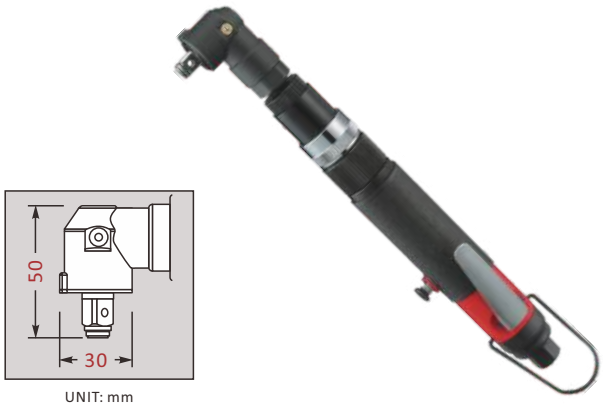

ZRAW-6CLB08 / ZRAW-6CLB15

Clutch Type | **Rear Exhaust**

3/8" Air Wrench

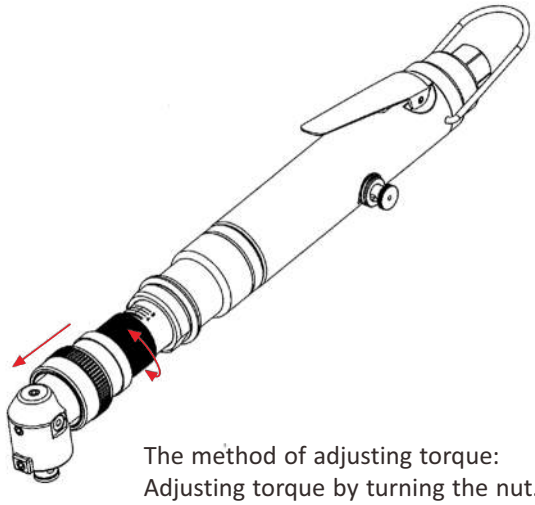

The method of adjusting torque:
Adjusting torque by turning the nut.

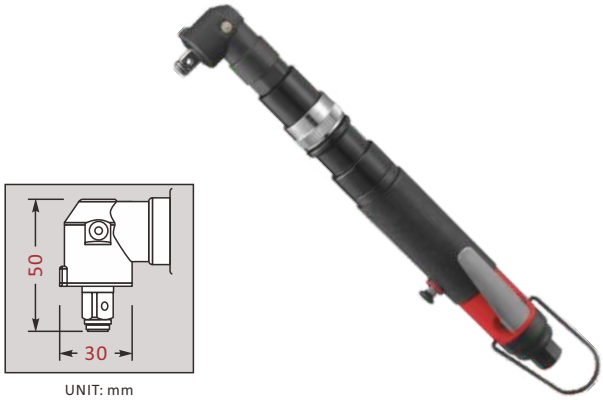

ZRAW-6SLB08 / ZRAW-6SLB15

Torque Control Type | **Rear Exhaust**

3/8" Air Wrench-Air shut off

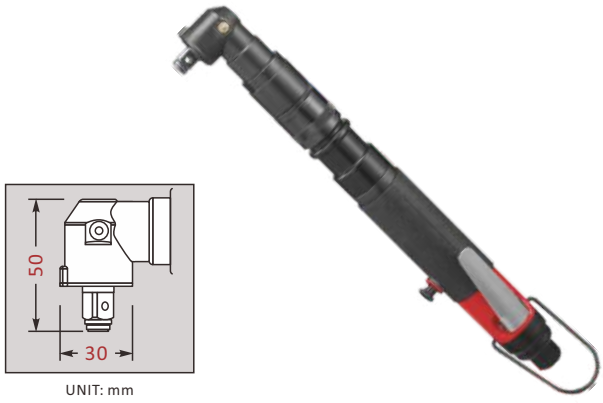

ZRAW-6SLB03

Torque Control Type | **Rear Exhaust**

3/8" Air Wrench-Air shut off

Model	Screw Size Capacity	Free Speed rpm	Max. Torque ft-lb(Nm)	Avg. Air Cons. cfm(l/min)	Overall Length inch(mm)	Noise Level db(A)	Net Weight lbs(kgs)	Air Inlet Size inch-NPT/PT
ZRAW-6CLB08	M5	800	3.7(5)	7(198)	13.15(334)	80	2.76(1.25)	1/4
ZRAW-6CLB15	M5	1450	3.7(5)	7(198)	13.15(344)	80	2.76(1.25)	1/4
ZRAW-6SLB15	M4	1450	0.9~1.8(1.2~2.4)	7(198)	13.39(340)	80	2.69(1.22)	1/4
ZRAW-6SLB08	M5	800	1.6~3.2(2.2~4.3)	7(198)	13.39(340)	80	2.69(1.22)	1/4
ZRAW-6SLB03	M6	340	3~7.4(4~10)	7(198)	13.77(350)	80	2.86(1.3)	1/4

- Operating Air Pressure: 90(6.2) psi(bar)

Mini Air Impact Wrench

Features

- Adjustable 3 stages speed for Forward/Reverse
- Most power and compact, deliver best Power-to-Size ratio in this class
- Use for heavy automotive and truck repair, construction or assembly line.
- With new twin hammer design and hot forged alloy steel made Hammer cage & Anvil to create more torque and 3 times longer life span than traditional design.

ZIW4207J Rear Exhaust

1/2" Micro Mini Air Impact Wrench

ZIW3207J Rear Exhaust

3/8" Micro Mini Air Impact Wrench

ZIW4206T Rear Exhaust

1/2" Micro Mini Air Impact Wrench

ZIW3206T Rear Exhaust

3/8" Micro Mini Air Impact Wrench

Accessories

- Mini air impact X 1
- Oiler X 1
- 3" Extension bar X 1
- 8 pcs Metric or SAE Cr-Mo sockets 10, 13, 14, 16, 17, 19, 21, 22mm or 5/16", 3/8", 7/16", 1/2", 9/16", 5/8", 11/16", 3/4"

w/ 8 pcs metric sockets	
ZIW4207JK-M	1/2" mini impact kit
ZIW3207JK-M	3/8" mini impact kit
ZIW4206TK-M	1/2" mini impact kit
ZIW3206TK-M	3/8" mini impact kit

w/ 8 pcs imperial sockets	
ZIW4207JK-E	1/2" mini impact kit
ZIW3207JK-E	3/8" mini impact kit
ZIW4206TK-E	1/2" mini impact kit
ZIW3206TK-E	3/8" mini impact kit

Jumbo Hammer Design

New Twin Hammer Design

Model	Square Drive inch(mm)	Std. Bolt Size inch(mm)	Free Speed rpm	Max. Torque (10 secs) ft-lb(Nm)	Avg. Air Cons. cfm(l/min)	Net Weight lbs(kgs)	Air Inlet Size inch-NPT/PT
ZIW4206T	1/2(12.7)	5/8(16)	11000	450(610)	7(200)	3(1.37)	1/4
ZIW3206T	3/8(10)	5/8(16)	11000	400(542)	7(200)	3(1.37)	1/4
ZIW4207J	1/2(12.7)	5/8(16)	11000	500(678)	7(200)	3(1.37)	1/4
ZIW3207J	3/8(10)	5/8(16)	11000	450(610)	7(200)	3(1.37)	1/4

- Operating Air Pressure: 90(6.2) psi(bar)
- Min. Hose Size: 3/8(10) inch(mm)

Products and specifications subject to change without prior notice

Mini Air Impact Wrench

Application:
Designed for difficult work in the confined space for Transmission, Engine and Brake.

Jumbo Hammer Design

ZIW440JL
1/2" Angle
Impact Wrench
Rotary Exhaust

ZIW340JLU
3/8" Adjustable Angle
Mini Impact Wrench
ZIW440JLU
1/2" Adjustable Angle
Mini Impact Wrench
Rotary Exhaust

New patented anvil design to add the grease into the impact mechanism without disassembly the tool.

ZIW417JA
ZIW417JAQ With Muffler
1/2" Super Light
Mini Air Impact Wrench
Handle Exhaust

ZIW417J
ZIW417JQ With Muffler
1/2" Super Light
Mini Air Impact Wrench
Handle Exhaust

ZIW418T
ZIW418TQ With Muffler
1/2" Super Light
Mini Air Impact Wrench
Handle Exhaust

Jumbo Hammer Design

Jumbo Hammer Design

New Twin Hammer Design

Model	Square Drive inch(mm)	Std. Bolt Size inch(mm)	Free Speed rpm	Max. Torque (10 secs) ft-lb(Nm)	Avg. Air Cons. cfm(l/min)	Net Weight lbs(kgs)	Air Inlet Size inch-NPT/PT
ZIW340JLU	3/8(10)	5/8(16)	9000	450(610)	4.2(119)	2.78(1.26)	1/4
ZIW440JLU	1/2(12.7)	5/8(16)	9000	450(610)	4.2(119)	2.78(1.26)	1/4
ZIW440JL	1/2(12.7)	5/8(16)	9000	450(610)	4.12(117)	2.78(1.26)	1/4
ZIW417JA	1/2(12.7)	5/8(16)	10000	700(949)	7.42(210)	3(1.37)	1/4
ZIW417JAQ	1/2(12.7)	5/8(16)	8500	700(949)	7.42(210)	3(1.37)	1/4
ZIW417J	1/2(12.7)	5/8(16)	9500	700(949)	7.42(210)	3.19(1.45)	1/4
ZIW417JQ	1/2(12.7)	5/8(16)	8000	700(949)	7.42(210)	3.19(1.45)	1/4
ZIW418T	1/2(12.7)	5/8(16)	10000	750(1017)	7.42(210)	3.3(1.5)	1/4
ZIW418TQ	1/2(12.7)	5/8(16)	9500	750(1017)	7.42(210)	3.3(1.5)	1/4

- Operating Air Pressure: 90(6.2) psi(bar)
- Min. Hose Size: 3/8(10) inch(mm)

Composite Air Impact Wrench

Twin hammer impact mechanism to perform best torque output, and Special Hardened-Treatment to maintain best durability.

Special Hardened Cylinder, Front plate and Rear late to generate best durability.

Titanium clutch case to re-enforce the strength (ZIW1063CT).

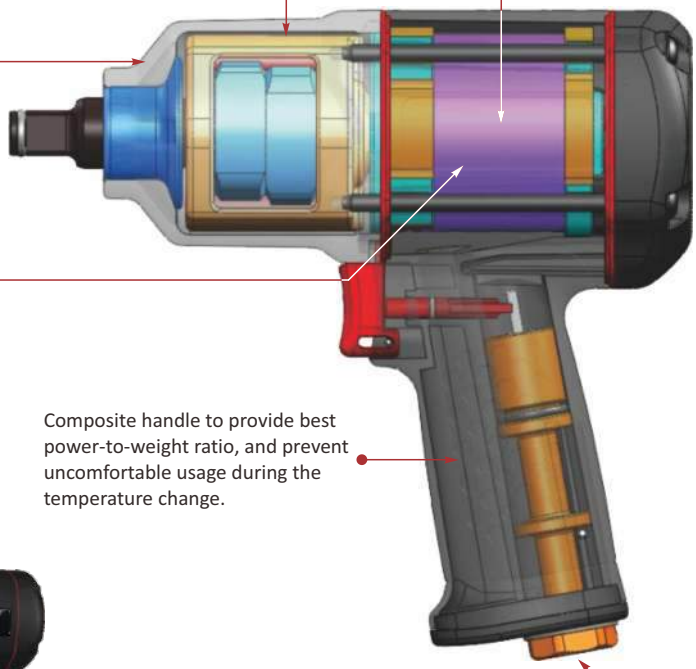

3 different speed adjustment at Forward direction, 1 full speed at Reverse direction.

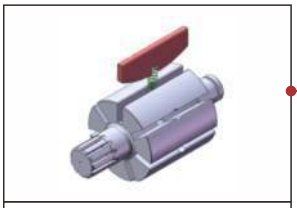

Vane with spring mounted to prevent dead-lock or power-less problem.

Composite handle to provide best power-to-weight ratio, and prevent uncomfortable usage during the temperature change.

360 degree swivel air inlet to prevent air hose twisted.

OPT.
Pin Type Anvil

ZIW1015C
1/2" Composite
Air Impact Wrench

ZIW1015CTL
1/2" Composite Torque
Limited Impact Wrench

ZIW1077C
3/4" Composite Air Impact Wrench

ZIW1077C-3
w/3" extension

ZIW1077C-6
w/6" extension

ZIW1078C
1" Composite
Air Impact Wrench

Model	Square Drive inch(mm)	Free Speed rpm	Max. Torque (15 secs) ft-lb(Nm)	Working Torque (5 secs) ft-lb(Nm)	Avg. Air Cons. cfm(l/min)	Net Weight lbs(kgs)	Impact mechanism
ZIW1015C	1/2(12.7)	8500	820(1100)	650(880)	4.9(139)	4.6(2.1)	Twin Hammer
ZIW1015CTL	1/2(12.7)	8500	820(1111)	55~66(75~90)	5.5(158)	4.6(2.1)	Twin Hammer
ZIW1077C	3/4(19)	5500	1500(2030)	1200(1630)	4.9(139)	8.2(3.7)	Twin Hammer
ZIW1077C-3	3/4(19)	5500	1500(2030)	1200(1630)	4.9(139)	9.3(4.2)	Twin Hammer
ZIW1077C-6	3/4(19)	5500	1500(2030)	1200(1630)	4.9(139)	9.9(4.5)	Twin Hammer
ZIW1078C	1(25)	5500	1500(2030)	1200(1630)	4.9(139)	8.2(3.7)	Twin Hammer

Products and specifications subject to change without prior notice

Composite Air Impact Wrench

ZIW1200 Handle Exhaust
1" Composite Impact Wrench

ZIW1200-6 Handle Exhaust
1" Composite Impact Wrench
w/6" extension

ZIW1201 Side Exhaust
1" Composite Impact Wrench

ZIW1201-8 Side Exhaust
1" Composite Impact Wrench
w/8" extension

● Twin hammer Anvil Material ● Japan SNCM 616	● Cast iron cylinder ● Cylinder Material FCD45 ● Heat treatment HRC 47~52°	● Blade auxiliary spring means Spring Material Stainless steel (304)Customized spring holder. ● 1 million tests by stretching test pass.

Model	Square Drive inch(mm)	Free Speed rpm	Max. Torque (15 secs) ft-lb(Nm)	Working Torque (5 secs) ft-lb(Nm)	Avg. Air Cons. cfm(l/min)	Net Weight lbs(kgs)	Air Inlet Size inch-NPT/PT	Impact mechanism
ZIW1200	1(25)	5500	2400(3240)	2200(2970)	7.5(212)	12.98(5.9)	1/4	Twin Hammer
ZIW1200-6	1(25)	5500	2400(3240)	2200(2970)	7.5(212)	14.96(6.8)	1/4	Twin Hammer
ZIW1201	1(25)	5500	2400(3240)	2200(2970)	7.5(212)	14.3(6.5)	1/4	Twin Hammer
ZIW1201-8	1(25)	5500	2400(3240)	2200(2970)	7.5(212)	17.16(7.9)	1/4	Twin Hammer

Twin Turbo Air Impact Wrench

Viton oil seal to prevent oil leakage excellent resistance to petroleum products.

Good high temperature and low compression characteristic.

Patented double air intake motor system; delivers highest torque in absolutely compact air wrench

One handed operation, easy to switch Forward and Reverse by a thumb; setting with, 2 speeds of Forward and 1 speed of reverse

Well balanced and lightweight (1.6 kg), with an ergonomic composite handle

Revolutionary PAT. Double Air Intake Technology

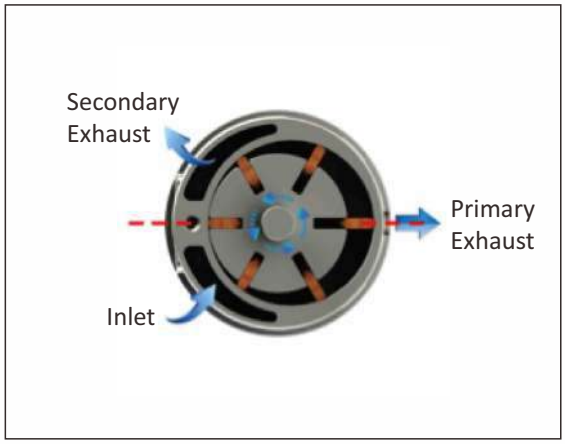

Normal Air Intake

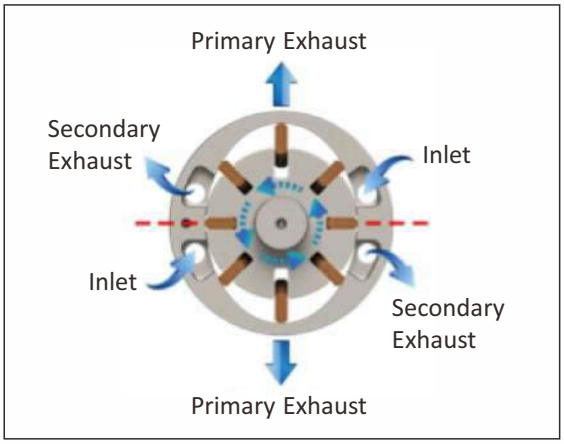

PAT. DAI Technology

Double Air Intake (D.A.I) delivers the utmost high torque yet down the size of impact gun with lightweight.

Features & Benefits

- Revolutionary patented DAI Double Air Intake motor system, Innovative design increased air intake flow delivers high torque in absolutely compact machine.
- One handed switch for 2 speeds forward, 1 speed reverse.
- The shortest length for better access in tight areas.
- Ergonomics comfort handle with well-balanced for users friendly.
- Viton oil seal to prevent oil leakage under high performance and high temperature.
- Front and end rotor plate insert a thin steel plate to prevent wear, keeps high performance.
- Cold resistance against -25°C for composite motor housing.
- Complicated processing, special material of rotor blade to provide wear resistance & very long life.

Twin Turbo Air Impact Wrench

NEW PRODUCT

ZIW1010C
1/2" MINI Composite Air Impact Wrench

ZIW1020C
1/2" Composite Air Impact Wrench

Nut Busting torque: 2356Nm, Bolt: 25.14mm

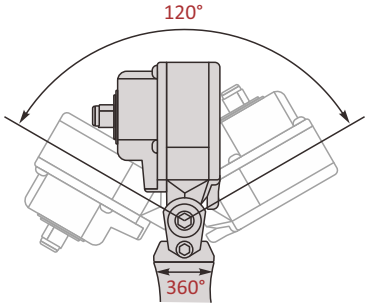

- 120-degree Bend-Over Hammer Head
- 360-degree free swivel Handle

ZIW340FA
3/8" Drive Dual-flex
Angle Pneumatic Impact Wrench

- Double Air Intake motor
- Twin hammer mechanism (Low vibration)
- Working torque: 400 ft-lbs
- Nut Busting torque: 963 ft-lbs (14.58 sec.)
- Sound pressure level: 90.1 dB(A) Lp A
- Vibration acceleration: 4.89 m/s²
- Bolt Capacity: 1/2" (13 mm)

ZIW410FA
1/2" Drive Dual-flex
Angle Pneumatic Impact Wrench

- Twin hammer impact wrench with pivoting head.
- Recommended torque: 450 Nm (333 ft-lbs)
- Forward and reverse: single-stage(right/left)
- Short, compact, angled design.
- Coupler plug: Nominal size 7.2(included)
- Cold insulated handle
- Powerful twin hammer mechanism

ZIW337P
3/8" Twin Turbo Palm
Air Impact Wrench

ZIW437P
1/2" Twin Turbo Palm
Air Impact Wrench

- Powerful Twin turbo air inlet motor and twin hammer impact wrench with super low vibration and super low reaction force.
- Working torque: 450 Nm (332 ft-lbs)
- Forward and reverse: single-stage (right/left)
- Cold insulated handle

Model	Square Drive inch(mm)	Free Speed rpm	Max. Torque ft-lb(Nm)	Avg. Air Cons. cfm(l/min)	Overall Length inch(mm)	Net Weight lbs(kgs)	Air Inlet Size inch-NPT/PT	Impact mechanism
ZIW1010C	1/2(12.7)	10000	500(680)	4.7(133)	4.8(122)	2.87(1.3)	1/4	Twin Hammer
ZIW1020C	1/2(12.7)	8300	1000(1350)	5.2(147)	5.9(150)	3.53(1.6)	1/4	Twin Hammer
ZIW340FA	3/8(10)	8500	400(542)	4(113)	3.46(88)	3.06(1.39)	1/4	Twin Hammer
ZIW410FA	1/2(12.7)	8000	370(500)	4(113)	3.35(85)	2.87(1.3)	1/4	Twin Hammer
ZIW337P	3/8(10)	8000	369(500)	4(113)	3.35(85)	2.43(1.1)	1/4	Twin Hammer
ZIW437P	1/2(12.7)	8000	369(500)	4(113)	3.35(85)	2.43(1.1)	1/4	Twin Hammer

- Operating Air Pressure: 90(6.2) psi(bar)
- Min. Hose Size: 3/8(10) inch(mm)

Air Torque Wrench

ATM200
1/2" Air Torque Wrench

ATM700
3/4" Air Torque Wrench

Supplied with air hose set, FRL unit, reaction arm & chart.

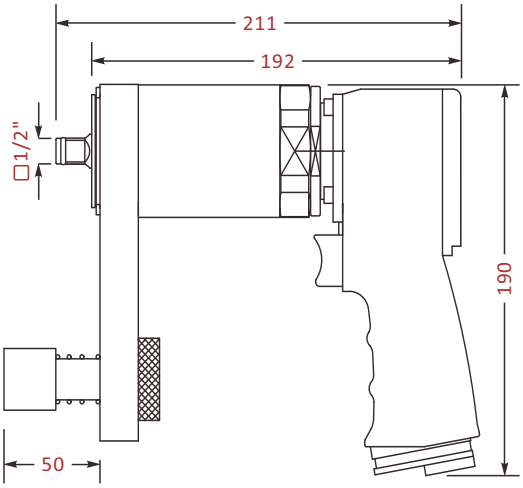

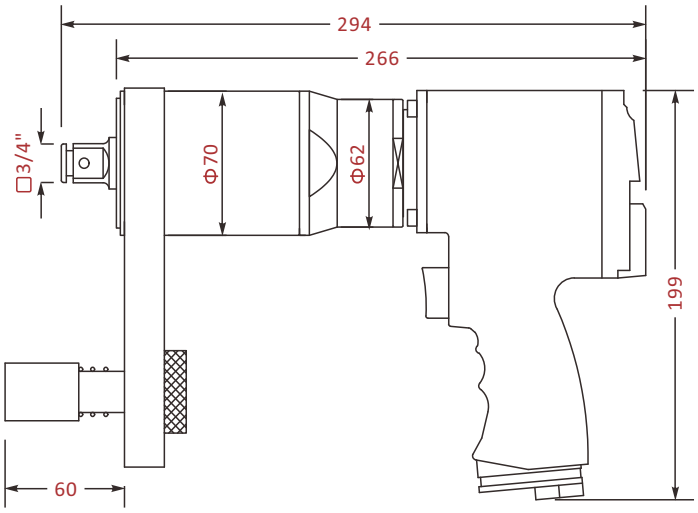

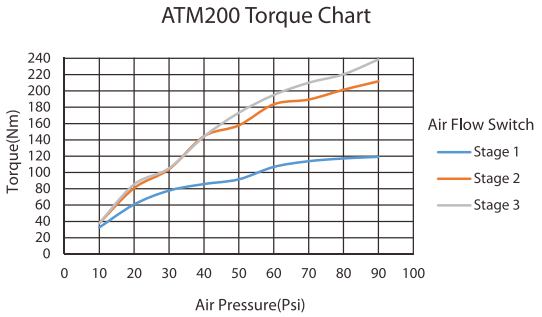

Measured on HBM torque tester: I.D. 8mm* O.D. 12mm * 3m air hose

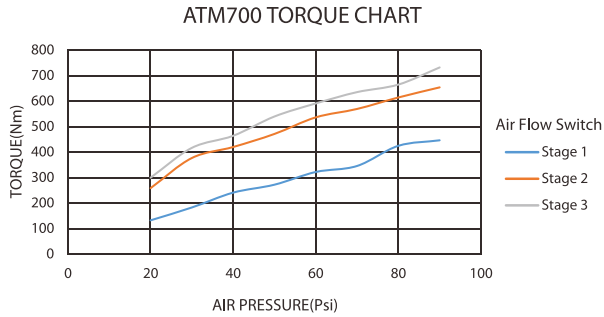

Measured on HBM torque tester: I.D. 8mm* O.D. 12mm * 3m air hose

Model	Square Drive inch(mm)	Free Speed rpm	Max. Torque ft-lb(Nm)	Avg. Air Cons. cfm(l/min)	Net Weight lbs(kgs)	Air Inlet Size inch-NPT/PT
ATM200	1/2(12.7)	84	147.5(200)	11.2(320)	10.14(4.6)	1/4
ATM700	3/4(19)	18	516(700)	12.25(350)	14.33(6.5)	1/4

- Operating Air Pressure: 90(6.2) psi(bar)
- Min. Hose Size: 3/8(10) inch(mm)

Products and specifications subject to change without prior notice

Air Ratchet Wrench

ZHD-7728
Hi-Lok® Installation Mini-Ratchet

ZHD-7748
Multi-Function Ratchet Wrench

- Anvil Size: 1/4 & 3/8(6 & 10) Inch(mm)

ZP168 1/4" Air Stubby Ratchet Wrench
ZP169 3/8" Air Stubby Ratchet Wrench

ZP161 0.5HP
Low Noise 1/2" Air Ratchet Wrench

ZP163 0.5HP
Low Noise 3/8" Air Ratchet Wrench

- The ZP161-LN & ZP163-LN Air Ratchets are rugged, variable speed, reversible air ratchets.
- It's paddle-style trigger provides better speed control and the polyurethane handle helps maintain temperature and insulate vibration.
- Unique ratchet head design insures the wrench free of failure.

Tool Advantages:

The right air ratchet for your Hi-Lok® installation for the quality seeking airframe mechanic.

- 1/4" adapter that stays attached to the tool. (With a special designed cap).
- Adjustable throttle to control the tool speed.
- 'No-mar' rubber protection.
- Thru-hole to be used with HEX key.
- Friction ring mechanism to keep the socket on the drive.
- Hi-Lok® Capacity up to - 1/4" in Al, 3/16" in Stainless Steel.

ZP161K / ZP163K

Air Ratchet Wrench Kit

Specifications:

- 1 pc Ratchet wrench
- 7 pcs Sockets
- 1 pc Nipple
- 1 pc Universal Joint
- 1 pc 75mm Extension Bar
- 1 pc Blow Molded Case

Model	Square Drive inch(mm)	Std. Bolt Size inch(mm)	Free Speed rpm	Max. Torque ft-lb(Nm)	Avg. Air Cons. cfm(l/min)	Overall Length inch(mm)	Net Weight lbs(kgs)	Air Inlet Size inch-NPT/PT	Min Hose Size inch(mm)
ZHD-7728	–	–	400	35(47.5)	3(85)	6-17/64(159)	1.06(0.48)	1/4	3/8(10)
ZHD-7748	–	–	850	30(40.7)	3.4(96)	6-1/6(155)	1.1(0.5)	1/4	3/8(10)
ZP161	1/2(12.7)	1/4(6.4)	175	50(68)	3(85)	10-13/32(265)	2.6(1.18)	1/4	3/8(10)
ZP163	3/8(10)	1/4(6.4)	175	50(68)	3(85)	10-13/32(265)	2.6(1.18)	1/4	3/8(10)
ZP168	1/4(6.4)	1/4(6.4)	260	20(27)	2.5(70)	5-1/4(133)	0.99(0.45)	1/4	1/4(6.4)
ZP169	3/8(10)	1/4(6.4)	260	20(27)	2.5(70)	5-1/4(133)	0.99(0.45)	1/4	1/4(6.4)

- Operating Air Pressure: 90(6.2) psi(bar)

Air Ratchet Wrench

- The ratchet wrench can be used in narrow working spaces and can fasten bolts and nuts easily. This special tool can be reached tight place that other air tools can not.
- Remove: First, loosen nut by wrench then take nut out with air ratchet.
- Fasten: Push trigger to position the nut then lock it with torque wrench.

ZRW-919LS Rear Exhaust
Air Ratchet Wrench

ZRW-925LS Rear Exhaust
Air Ratchet Wrench

ZRW-925LSB Rear Exhaust
Air Ratchet Wrench

ZRW-920LS Rear Exhaust
Air Ratchet Wrench

ZRW-938LS Rear Exhaust
Air Ratchet Wrench

Model	Hex Size mm	Free Speed rpm	Max. Torque ft-lb(Nm)	Working Torque ft-lb(Nm)	Avg. Air Cons. cfm(l/min)	Noise Level db(A)	Net Weight lbs(kgs)
ZRW-919LS	6, 7, 8, 10, 11, 12, 1/4", 3/8"	180	7(10)	7(10)	4.5(127)	86	2.87(1.3)
ZRW-925LS	10, 11, 12, 13, 14, 1/2", 9/16"	250	18(25)	11(15)	7.5(212)	87	4.23(1.92)
ZRW-925LSB	10, 11, 12, 13, 14, 15, 16, 17, 18, 19, 11/16"	160	18(25)	11(15)	7.5(212)	87	4.4(2)
ZRW-920LS	10, 11, 12, 13, 14, 15, 16, 17, 18, 19, 11/16"	150	66(90)	59(80)	12.5(353)	92	5.33(2.42)
ZRW-938LS	21, 22, 23, 24, 26, 27	130	66(90)	59(80)	12.5(353)	92	5.46(2.48)

- Operating Air Pressure: 90(6.2) psi(bar)
- Air Inlet Size: 1/4 inch-NPT/PT

Products and specifications subject to change without prior notice

Air Ratchet Wrench

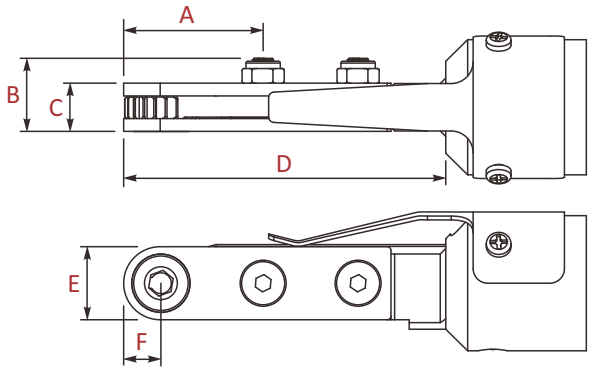

Model	A	B	C	D	E	F
	mm	mm	mm	mm	mm	mm
ZRW-919LS	38.2	20	13.2	88.2	20	10.2
ZRW-925LS	44.4	26	18	109	25.2	12.2
ZRW-925LSB	51	26	18	115	33.2	16.6
ZRW-920LS	51	26	18	115	33.2	16.6
ZRW-938LS	59	26	18	123	41	20.5

Air Ratchet Wrench Order Code Reference

Model	ZRW-919LS	ZRW-925LS	ZRW-925LSB	ZRW-920LS	ZRW-938LS
Hex Size	Order Code				
6mm	ZRW-919LS-6				
7mm	ZRW-919LS-7				
8mm	ZRW-919LS-8				
9mm	ZRW-919LS-9				
10mm	ZRW-919LS-10	ZRW-925LS-10	ZRW-925LSB-10	ZRW-920LS-10	
11mm	ZRW-919LS-11	ZRW-925LS-11	ZRW-925LSB-11	ZRW-920LS-11	
12mm	ZRW-919LS-12	ZRW-925LS-12	ZRW-925LSB-12	ZRW-920LS-12	
13mm		ZRW-925LS-13	ZRW-925LSB-13	ZRW-920LS-13	
14mm		ZRW-925LS-14	ZRW-925LSB-14	ZRW-920LS-14	
15mm			ZRW-925LSB-15	ZRW-920LS-15	
16mm			ZRW-925LSB-16	ZRW-920LS-16	
17mm			ZRW-925LSB-17	ZRW-920LS-17	
18mm			ZRW-925LSB-18	ZRW-920LS-18	
19mm			ZRW-925LSB-19	ZRW-920LS-19	
21mm					ZRW-938LS-21
22mm					ZRW-938LS-22
23mm					ZRW-938LS-23
24mm					ZRW-938LS-24
26mm					ZRW-938LS-26
27mm					ZRW-938LS-27
1/4"	ZRW-919LS-1/4				
3/8"	ZRW-919LS-3/8				
1/2"		ZRW-925LS-1/2			
9/16"		ZRW-925LS-9/16			
11/16"			ZRW-925LSB-11/16	ZRW-920LS-11/16	

Air Ratchet Wrench

ZRW-923LR Rear Exhaust
Air Ratchet Wrench

ZRW-925LR Rear Exhaust
Air Ratchet Wrench

NEW PRODUCT

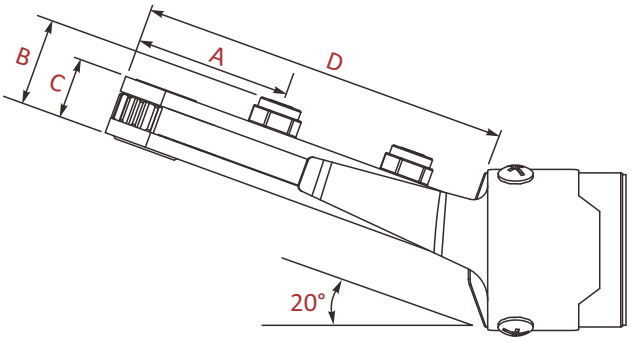

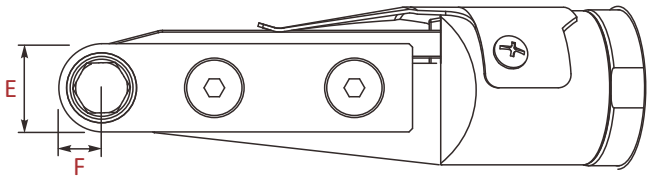

Model	A	B	C	D	E	F
	mm	mm	mm	mm	mm	mm
ZRW-923LR	38.2	20	13.2	83.9	20	10.2
ZRW-925LR	44.4	26	18	105	25.2	12.2
ZRW-925LRB	51	26	18	111.5	33.2	16.6

Air Ratchet Wrench Order Code Reference

Model	ZRW-923LR	ZRW-925LR	ZRW-925LRB
Hex Size	Order Code		
6mm	ZRW-923LR-6		
7mm	ZRW-923LR-7		
8mm	ZRW-923LR-8		
9mm	ZRW-923LR-9		
10mm	ZRW-923LR-10	ZRW-925LR-10	ZRW-925LRB-10
11mm	ZRW-923LR-11	ZRW-925LR-11	ZRW-925LRB-11
12mm	ZRW-923LR-12	ZRW-925LR-12	ZRW-925LRB-12
13mm		ZRW-925LR-13	ZRW-925LRB-13
14mm		ZRW-925LR-14	ZRW-925LRB-14
15mm			ZRW-925LRB-15
16mm			ZRW-925LRB-16
17mm			ZRW-925LRB-17
18mm			ZRW-925LRB-18
19mm			ZRW-925LRB-19
1/4"	ZRW-923LR-1/4		
3/8"	ZRW-923LR-3/8		
1/2"		ZRW-925LR-1/2	
9/16"		ZRW-925LR-9/16	
11/16"			ZRW-925LRB-11/16

- Equal specifications:
  5/16"<=>8mm, 5/8"<=>16mm, 3/4"<=>19mm

Model	Hex Size mm	Free Speed rpm	Max. Torque ft-lb(Nm)	Working Torque ft-lb(Nm)	Avg. Air Cons. cfm(l/min)	Noise Level db(A)	Overall Length inch(mm)	Net Weight lbs(kgs)
ZRW-923LR	6, 7, 8, 9, 10, 11, 12 1/4", 3/8"	180	7(10)	7(10)	4.5(127)	86	11.06(281)	2.82(1.28)
ZRW-925LR	10, 11, 12, 13,1 4, 1/2", 9/16"	220	18(25)	11(15)	7.5(212)	87	12.88(327)	4.23(1.92)
ZRW-925LRB	10, 11, 12, 13, 14, 15, 16, 17, 18, 19, 11/16"	190	18(25)	11(15)	7.5(212)	87	13.11(333)	4.4(2)

- Operating Air Pressure: 90(6.2) psi(bar)
- Air Inlet Size: 1/4 inch-NPT/PT

Products and specifications subject to change without prior notice

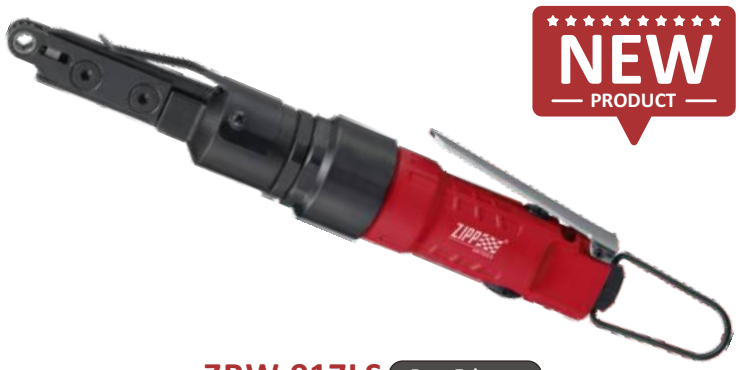

ZRW-917LS Rear Exhaust

Mini Air Ratchet Wrench

Air Ratchet Wrench Order Code Reference	
Model	ZRW-917LS
Hex Size	Order Code
6mm	ZRW-917LS-6
1/4"	ZRW-917LS-1/4

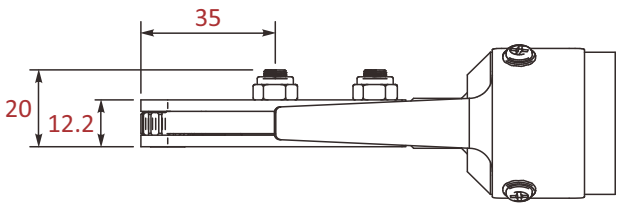

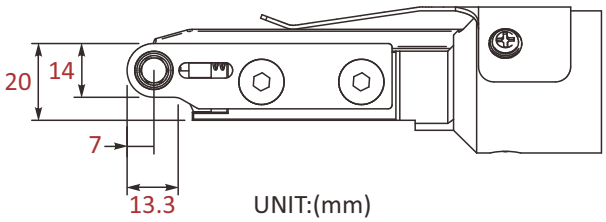

Model	Hex Size mm	Free Speed rpm	Max. Torque ft-lb(Nm)	Working Torque ft-lb(Nm)	Avg. Air Cons. cfm(l/min)	Noise Level db(A)	Overall Length inch(mm)	Net Weight lbs(kgs)
ZRW-917LS	6, 1/4"	250	7(10)	7(10)	4.5(127)	86	11.1(282)	2.77(1.26)

- Operating Air Pressure: 90(6.2) psi(bar)
- Air Inlet Size: 1/4 inch-NPT/PT

Exclusive Bit

- Used with ZRW-917LS-1/4" can be used with multi-size thin socket.

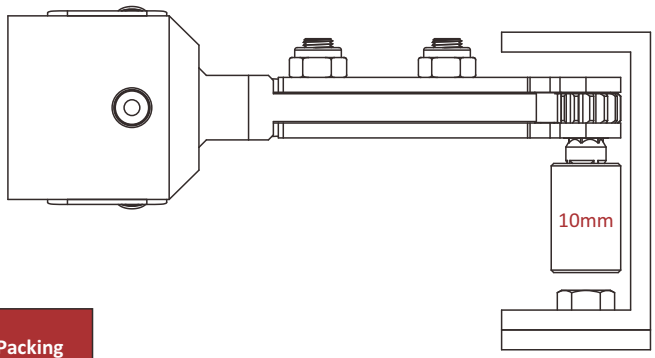

Model	☐ Type	⬡ Type	Length mm	Net Weight g	Packing
96A2025	1/4"	1/4"	25	10	10PCS

Air Open-end Wrench

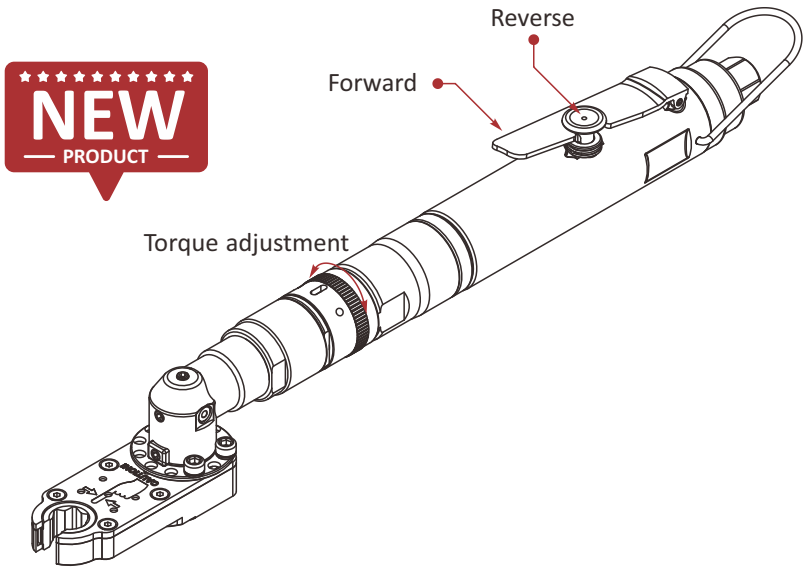

ZREW-28

Air shut off | **Rear Exhaust**

Air Open-end Wrench

ZREW-35

Air shut off | **Rear Exhaust**

Air Open-end Wrench

ZREW-43

Air shut off | **Rear Exhaust**

Air Open-end Wrench

ZREW-66

Air shut off | **Rear Exhaust**

Air Open-end Wrench

Model	Hex Size mm	Free Speed rpm	Max. Torque Nm	Avg. Air Cons. cfm(l/min)	Noise Level db(A)	Overall Length inch(mm)	Net Weight lbs(kgs)
ZREW-28	7, 8, 9, 10, 11, 12, 13, 14, 15, 16, 17	230	7.5~15	7(198)	87	16.25(413)	3.68(1.67)
ZREW-35	17, 18, 19, 20, 21, 22, 23, 24, 11/16"	150	10~20	7(198)	87	17.24(438)	4.05(1.84)
ZREW-43	24, 26, 27, 29, 30, 32	115	12~24	7(198)	87	18.14(461)	4.6(2.09)
ZREW-66	36, 38, 4, 41, 46, 50, 55	100	14~28	7(198)	87	19.84(504)	5.55(2.52)

- Operating Air Pressure: 90(6.2) psi(bar)
- Air Inlet Size: 1/4 inch-NPT/PT

Products and specifications subject to change without prior notice

Air Open-end Wrench

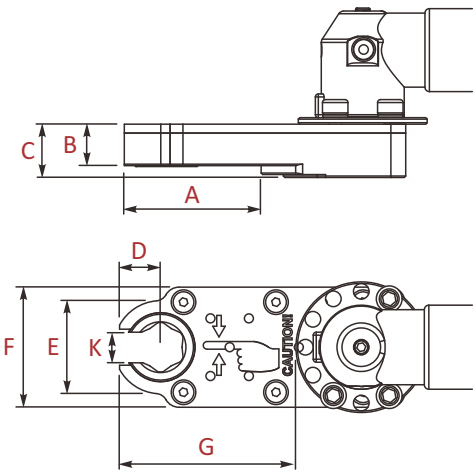

Model	A	B	C	D	E	F	G
	mm	mm	mm	mm	mm	mm	mm
ZREW-28	46.2	14	18	13.6	31	40	58.8
ZREW-35	57.2	14	18	20.6	46.6	48	83.2
ZREW-43	71	14	18	26.6	59	59	106.6
ZREW-66	92.1	14	18	39.3	86	86	149.3

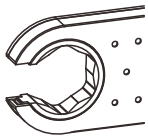
Standard Type

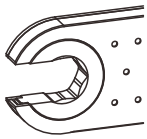
Insert Type

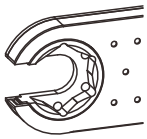
Blind Type

Air Ratchet Wrench Order Code Reference

Model	ZREW-28	ZREW-35	ZREW-43	K	L
	Order Code				
Hex Size	Blind Type			mm	mm
8mm	ZREW-28-BD8			5.6	5
10mm	ZREW-28-BD10			7	6.5
11mm	ZREW-28-BD11			8.1	6.5
12mm	ZREW-28-BD12			8.5	9
13mm	ZREW-28-BD13			9	9
14mm	ZREW-28-BD14			10.2	9
15mm	ZREW-28-BD15			10.5	9
16mm	ZREW-28-BD16			10.9	9
17mm	ZREW-28-BD17	ZREW-35-BD17		11.3	9
18mm		ZREW-35-BD18		12	9
19mm		ZREW-35-BD19		13.1	9
20mm		ZREW-35-BD20		13.5	9
21mm		ZREW-35-BD21		15	9
22mm		ZREW-35-BD22		15.2	9
23mm		ZREW-35-BD23		15.5	9
24mm		ZREW-35-BD24	ZREW-43-BD24	16.1	99
26mm			ZREW-43-BD26	17.1	9
27mm			ZREW-43-BD27	18.1	9
29mm			ZREW-43-BD29	19.2	9
30mm			ZREW-43-BD30	20.1	9
32mm			ZREW-43-BD32	21.2	9

- Equal specifications:
  5/16"<=>8mm, 5/8"<=>16mm, 3/4"<=>19mm,
  1–1/16"<=>27mm, 1–3/8"<=>35mm, 1–1/2"<=>38mm

Air Ratchet Wrench Order Code Reference

Model	ZREW-28	ZREW-35	ZREW-43	ZREW-66	K
	Order Code				
Hex Size	Insert Type				mm
7mm	ZREW-28-SR7				7.1
8mm	ZREW-28-SR8				8.1
9mm	ZREW-28-SR9				9.1
10mm	ZREW-28-SR10				10.1
11mm	ZREW-28-SR11				11.1
12mm		ZREW-35-SR12			12.1
13mm		ZREW-35-SR13			13.1
14mm		ZREW-35-SR14			14.1
15mm		ZREW-35-SR15			15.1
16mm		ZREW-35-SR16			16.1
17mm			ZREW-43-SR17		17.1
18mm			ZREW-43-SR18		18.1
19mm			ZREW-43-SR19		19.1
20mm			ZREW-43-SR20		20.1
21mm			ZREW-43-SR21		21.1
22mm			ZREW-43-SR22		22.1
36mm				ZREW-66-SR36	36.1

Hex Size	Standard Type				K
					mm
7mm	ZREW-28-7				5
8mm	ZREW-28-8				5.6
9mm	ZREW-28-9				6.5
10mm	ZREW-28-10				7
11mm	ZREW-28-11				8.1
12mm	ZREW-28-12				8.5
13mm	ZREW-28-13				9
14mm	ZREW-28-14				10.2
15mm	ZREW-28-15				10.5
16mm	ZREW-28-16				10.9
17mm	ZREW-28-17	ZREW-35-17			11.3
18mm		ZREW-35-18			12
19mm		ZREW-35-19			13.1
20mm		ZREW-35-20			13.5
21mm		ZREW-35-21			15
22mm		ZREW-35-22			15.2
23mm		ZREW-35-23			15.5
24mm		ZREW-35-24	ZREW-43-24		16.1
26mm			ZREW-43-26		17.1
27mm			ZREW-43-27		18.1
29mm			ZREW-43-29		19.2
30mm			ZREW-43-30		20.1
32mm			ZREW-43-32		21.2
36mm				ZREW-66-36	25
38mm				ZREW-66-38	26
40mm				ZREW-66-40	27
41mm				ZREW-66-41	28
46mm				ZREW-66-46	31
50mm				ZREW-66-50	34.5
55mm				ZREW-66-55	37.5
11/16"		ZREW-35-11/16			11.5

Air Open-end Wrench

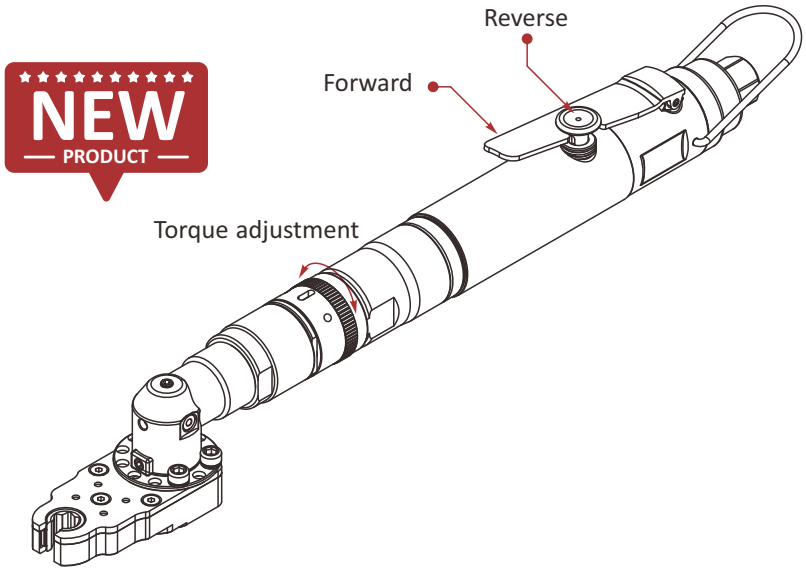

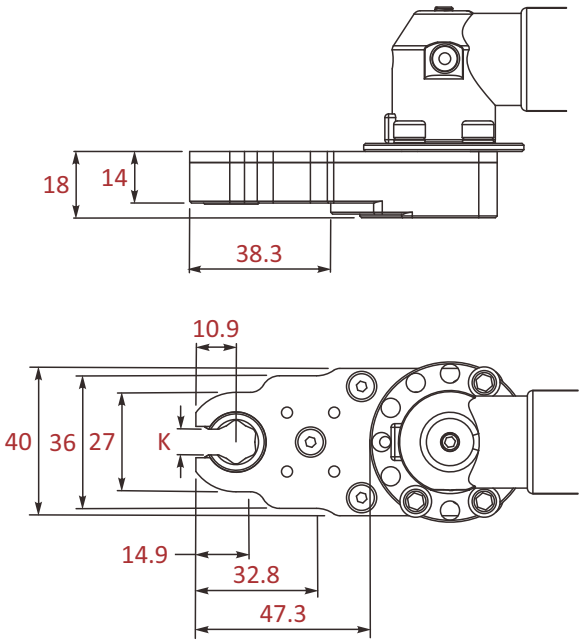

UNIT:(mm)

ZREW-21

Air shut off | Rear Exhaust

Air Open-end Wrench

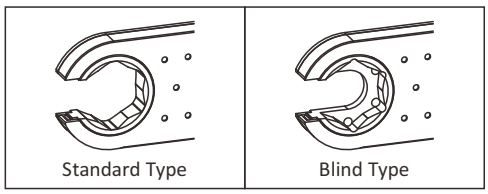

Air Ratchet Wrench Order Code Reference			
Model	ZREW-21		
Order Code			
Hex Size	Blind Type	K mm	L mm
8mm	ZREW-21-BD8	5.6	5
10mm	ZREW-21-BD10	7	6.5
Hex Size	Standard Type	K mm	
8mm	ZREW-21-8	5.6	
10mm	ZREW-21-10	7	

- Equal specifications: 5/16"<=>8mm

Model	Hex Size mm	Free Speed rpm	Max. Torque Nm	Avg. Air Cons. cfm(l/min)	Noise Level db(A)	Overall Length inch(mm)	Net Weight lbs(kgs)
ZREW-21	6, 10	300	6~12	7(198)	87	15.82(402)	3.63(1.65)

- Operating Air Pressure: 90(6.2) psi(bar)
- Air Inlet Size: 1/4 inch-NPT/PT

Products and specifications subject to change without prior notice

Air Impact Driver

ZID-036 Side Exhaust

Impact Driver

ZID-040P Rear Exhaust

Impact Driver

New Twin Hammer Design		● Two hammer design with Q.C. collect ● Forward/Reverse switch ● Two stages push type trigger ● Use for general automotive industries, electric or and assembly lines

ZID-350P Rear Exhaust

Impact Driver

Noise: 88dB(A), Vibration: 2.5(m/s²)

ZIS-237 Rear Exhaust

1/4" Air Impact Driver

Twin Hammer		Twin Hammer	
	● Two hammer design with Q.C. collect ● Adjustable 3 stages speed for Forward/Reverse ● Use for general automotive industries, electric or and assembly lines	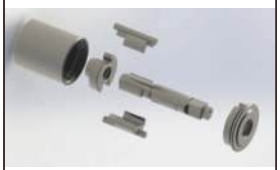	● Double-Chamber 9 vanes motor provides the highest output power comparing with conventional motor for the highest productivity. ● Double Pin Hammer mechanism. ● One piece front end plate & cylinder design to improve motorefficiency. ● User friendly side reverse switch.

Model	Hex. Drive inch(mm)	Bolt Size Capacity mm	Free Speed rpm	Max. Torque ft-lb(Nm)	Avg. Air Cons. cfm(l/min)	Overall Length inch(mm)	Net Weight lbs(kgs)	Air Inlet Size inch-NPT/PT
ZID-036	1/4(6.4)	6~8	8000	41(55)	4.6(130)	7-13/16(198)	2.2(1)	1/4
ZID-040P	1/4(6.4)	6~8	8500	42(57)	5.6(160)	6-25/32(172)	2.2(1)	1/4
ZID-350P	1/4(6.4)	10~12	11000	350(474)	8.12(230)	5-25/32(147)	3.5(1.6)	1/4
ZIS-237	1/4(6.4)	6~8	5300	37(50)	17.7(500)	–	1.9(0.84)	1/4

● Operating Air Pressure: 90(6.2) psi(bar)

Torque Control Air Screwdriver

Motor Comparison

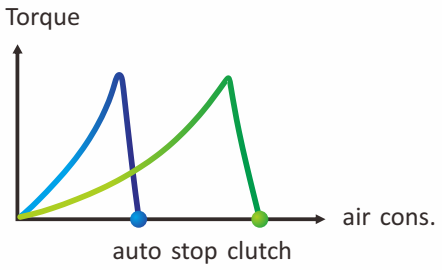

- Patented motor
- Traditional motor

Torque schematic diagram

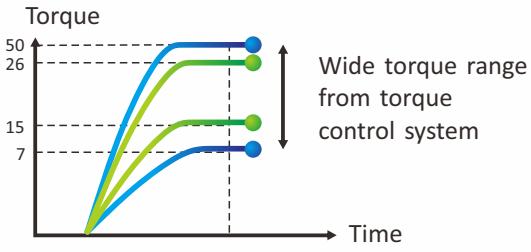

- Patented torque control system
- Traditional torque control system

Torque Control Air Screwdriver

ZB21MC / ZB31MC / ZB41MC
ZB46MC / ZB49MC / ZB51MC
ZB56MC / ZB59MC / ZB61MC
ZB66MC / ZB71MC / ZB76MC
ZB79MC

ZB46CCQ / ZB49CCQ / ZB52CCQ
ZB58CCQ / ZB59CCQ / ZB61CCQ
ZB66CCQ / ZB71CCQ / ZB76CCQ
ZB79CCQ

Model	Free Speed rpm	Torque range kgf-cm	Standard Deviation %	Fastening Capacity		Air Pressure kg/cm²	Min. air hose bore mm	Air Consumption m³/min	O.A.L mm	Dia. mm	High mm	Net Weight lbs(kgs)
				Machine Screw Dia.	Tapping Screw Dia.							
ZB21MC	1000	0.5-2	±3	M1.0-M2.2	M1.1-M1.7	6.0	5.0	0.20	210	31	–	1.15(0.52)
ZB31MC	1000	1-8	±3	M1.7-M3.3	M1.3-M2.7	6.0	5.0	0.20	210	31	–	1.15(0.52)
ZB41MC	1800	3-17	±3	M2.2-M4.2	M1.7-M3.2	6.0	5.0	0.28	210	31	–	1.15(0.52)
ZB46MC	2200	3-20	±3	M2.2-M4.5	M1.7-M3.5	6.0	5.0	0.28	210	31	–	1.15(0.52)
ZB49MC	1800	3-25	±3	M2.2-M4.7	M1.7-M3.8	6.0	5.0	0.28	210	31	–	1.15(0.52)
ZB51MC	1000	5-30	±3	M2.8-M5.0	M2.3-M4.0	6.0	5.0	0.28	210	31	–	1.15(0.52)
ZB56MC	800	8-40	±3	M3.3-M5.7	M2.7-M4.4	6.0	5.0	0.3	210	31	–	1.15(0.52)
ZB59MC	1700	5-45	±3	M2.8-M5.8	M2.2-M4.7	6.0	8.0	0.55	245	39	–	1.81(0.82)
ZB61MC	1400	7-50	±3	M2.9-M6.0	M2.6-M4.9	6.0	8.0	0.55	245	39	–	1.81(0.82)
ZB66MC	1000	7-65	±3	M2.9-M6.4	M2.6-M5.4	6.0	8.0	0.55	245	39	–	1.81(0.82)
ZB71MC	550	15-95	±3	M4.1-M7.0	M3.1-M6.0	6.0	8.0	0.55	245	39	–	1.81(0.82)
ZB76MC	300	30-180	±3	M5.0-M9.3	M4.0-M7.2	6.0	8.0	0.55	245	39	–	1.86(0.84)
ZB79MC	250	50-280	±3	M6.0-M11.0	M4.9-M8.7	6.0	8.0	0.55	245	39	–	1.86(0.84)
ZB46CCQ	2200	3-20	±3	M2.2-M4.5	M1.7-M3.5	6.0	5.0	0.28	190	35	190	1.41(0.64)
ZB49CCQ	1800	3-25	±3	M2.2-M4.7	M1.7-M3.8	6.0	5.0	0.28	190	35	190	1.41(0.64)
ZB52CCQ	1000	5-35	±3	M2.8-M5.2	M2.2-M4.2	6.0	5.0	0.28	190	35	190	1.41(0.64)
ZB58CCQ	550	10-50	±3	M3.6-M6.0	M2.8-M4.7	6.0	5.0	0.28	190	35	190	1.41(0.64)
ZB59CCQ	1700	7-50	±3	M2.9-M6.0	M2.6-M4.9	6.0	8.0	0.55	220	43	220	2.16(0.98)
ZB61CCQ	1400	10-60	±3	M3.6-M6.2	M2.8-M5.1	6.0	8.0	0.55	220	43	220	2.16(0.98)
ZB66CCQ	1000	12-75	±3	M3.8-M6.6	M3.0-M5.6	6.0	8.0	0.55	220	43	220	2.16(0.98)
ZB71CCQ	550	30-110	±3	M5.0-M7.3	M4.0-M6.2	6.0	8.0	0.55	220	43	220	2.16(0.98)
ZB76CCQ	300	30-180	±3	M5.0-M9.3	M4.0-M7.2	6.0	8.0	0.55	220	43	220	2.43(1.1)
ZB79CCQ	250	50-280	±3	M6.0-M11.0	M4.9-M8.7	6.0	8.0	0.55	220	43	220	2.76(1.25)

- Operating Air Pressure: 90(6.2) psi(bar)
- Output torque adjusts to 50% of maximum rated torque.

Straight Downward Pressure Fully Automatic Pneumatic Screwdriver

NEW PRODUCT

ZSS1-22-20 / ZSS1-10-30 / ZSS1-08-40
ZSS2-18-45 / ZSS2-14-50 / ZSS2-10-65 / ZSS2-05-95

Straight Downward Pressure Fully Automatic Pneumatic Screwdriver

Model	Free Speed rpm	Torque range kgf-cm	Standard Deviation %	Fastening Capacity		Air Pressure kg/cm²	Min. air hose bore mm	Air Consumption m³/min	O.A.L mm	Dia. mm	Net Weight lbs(kgs)
				Machine Screw Dia.	Tapping Screw Dia.						
ZSS1-22-20	2200	3-20	±3	M2.2-M4.5	M1.7-M3.5	6	5	0.28	180	29	0.95(0.43)
ZSS1-10-30	1000	5-30	±3	M2.8-M5.0	M2.2-M4.0	6	5	0.28	180	29	0.95(0.43)
ZSS1-08-40	800	8-40	±3	M3.3-M5.7	M2.7-M4.4	6	6.35	0.28	180	29	0.95(0.43)
ZSS2-18-45	1700	5-45	±3	M2.8-M5.8	M2.2-M4.7	6	8	0.55	215	37	1.7(0.77)
ZSS2-14-50	1400	7-50	±3	M2.9-M6.0	M2.6-M4.9	6	8	0.55	215	37	1.7(0.77)
ZSS2-10-65	1000	7-65	±3	M2.9-M6.4	M2.6-M5.4	6	8	0.55	215	37	1.7(0.77)
ZSS2-05-95	550	15-95	±3	M4.1-M7.0	M3.1-M6.0	6	8	0.55	215	37	1.7(0.77)

- Operating Air Pressure: 90(6.2) psi(bar)
- Output torque adjusts to 50% of maximum rated torque.

Angled Wrench Type Pneumatic Screwdriver

NEW PRODUCT

ZAS-45AB / ZAS-95AB / ZAS-280AB

Angled wrench type pneumatic screwdriver

Model	Free Speed rpm	Torque range kgf-cm	Standard Deviation %	Fastening Capacity		Air Pressure kg/cm²	Min. air hose bore mm	Air Consumption m³/min	O.A.L mm	Dia. mm	Net Weight lbs(kgs)
				Machine Screw Dia.	Tapping Screw Dia.						
ZAS-45AB	1800	5-45	±3	M2.8-M5.8	M2.2-M4.7	6	8	0.55	345	37	2.65(1.2)
ZAS-95AB	550	15-95	±3	M4.1-M7.0	M3.1-M6.0	6	8	0.55	345	37	2.65(1.2)
ZAS-280AB	250	50-280	±3	M6.0-M11.0	M4.9-M8.7	6	8	0.55	345	37	3.09(1.4)

- Operating Air Pressure: 90(6.2) psi(bar)
- Output torque adjusts to 50% of maximum rated torque.

Products and specifications subject to change without prior notice

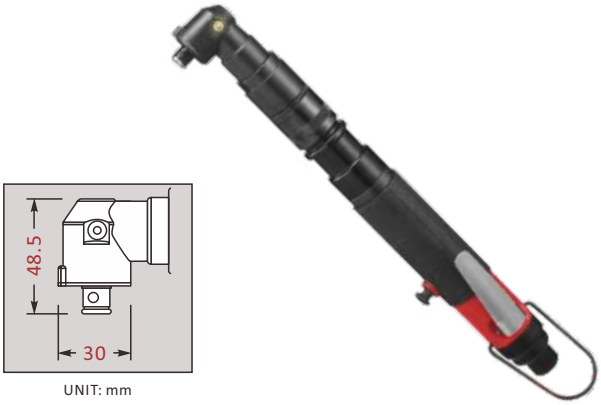

UNIT: mm

ZRAW-6SLA03

Torque Control Type | **Rear Exhaust**

Air Screwdriver-Air shut off

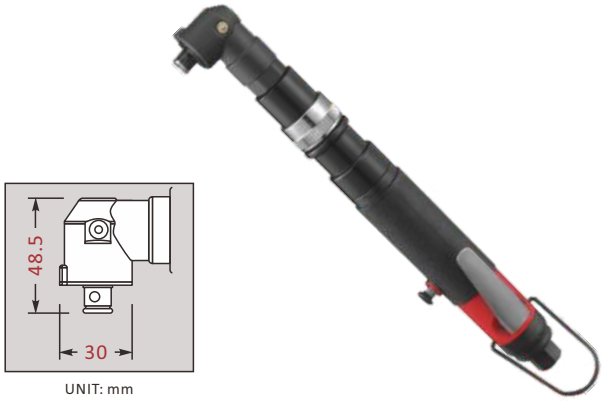

UNIT: mm

ZRAW-6SLA08

Torque Control Type | **Rear Exhaust**

Air Screwdriver-Air shut off

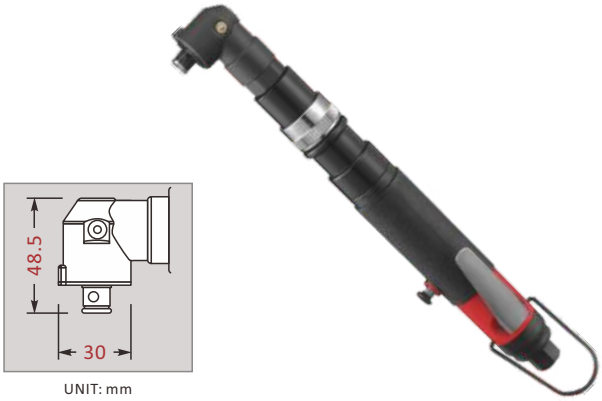

UNIT: mm

ZRAW-6SLA15

Torque Control Type | **Rear Exhaust**

Air Screwdriver-Air shut off

Model	Screw Size Capacity	Free Speed rpm	Max. Torque ft-lb(Nm)	Noise Level db(A)	Avg. Air Cons. cfm(l/min)	Air Inlet Size inch-NPT/PT	Overall Length inch(mm)	Net Weight lbs(kgs)
ZRAW-6SLA15	4mm	1450	0.9~1.8(1.2~2.4)	80	7(198)	1/4	13.39(340)	2.69(1.22)
ZRAW-6SLA08	5mm	800	1.6~3.2(2.2~4.3)	80	7(198)	1/4	13.39(340)	2.69(1.22)
ZRAW-6SLA03	6mm	340	3~7.4(4~10)	80	7(198)	1/4	13.77(350)	2.86(1.3)

- Operating Air Pressure: 90(6.2) psi(bar)

High Torque Angle Wrench

Features

- Suitable for high precision industry, high torque accuracy.
- The tool will automatically stop when it is locked to the set torque value.
- Maximum torque reaches 120Nm.
- Externally adjustable torque adjustment ring makes it easy to adjust the torque.
- The forward and reverse switch design allows the tool to easily lock and remove screws.
- The elongated ergonomic design makes it easier for the operator to hold and reduces reaction force.
- 90-degree angle design allows operation in narrow spaces.
- Machine capability index > 1.67±10% @ according to ISO5393.
- Tool performance testing and certification according to VDI/VDE 2647.
- Specification of bit: 3/8"SQ、 1/2"SQ
  【 Note: Some models are available in 3/8" or 1/2" SQ drive. Please specify when ordering.】

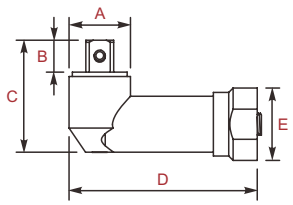

Model	Angle Size (mm)				
	A	B	C	D	E
ZRAW-715ABSF	28	12	48	86	33
ZRAW-72ABSF	28	12	48	86	33
ZRAW-7025ABSF	28	12	48	86	33
ZRAW-725ABSF	28	12	48	86	33
ZRAW-73ABSF	28	15	51	89	33
ZRAW-74ABSF	28	15	51	89	33
ZRAW-745ABSF	35	14	58	94	40
ZRAW-75ABSF	35	14	58	94	40

Model	SQ Drive	Free Speed rpm	Torque range ft-lb(Nm)	Noise Level db(A)	Standard Deviation %	Air Pressure kg/cm²	Min. air hose bore mm	Avg. Air Cons. cfm(l/min)	Overall Length inch(mm)	Net Weight lbs(kgs)
ZRAW-715ABSF	3/8" or 1/2"	700	4.4-13.3(6-18)	78	±5	6	8	9	14.15(359)	3.53(1.6)
ZRAW-72ABSF	3/8" or 1/2"	430	7.4-18.4(10-25)	78	±5	6	8	9	14.15(359)	3.53(1.6)
ZRAW-7025ABSF	3/8" or 1/2"	430	7.4-20.7(10-28)	78	±5	6	8	9	14.15(359)	3.53(1.6)
ZRAW-725ABSF	3/8" or 1/2"	350	8.9-20.7(12-28)	78	±5	6	8	9	14.15(359)	3.75(1.7)
ZRAW-73ABSF	3/8" or 1/2"	250	7.4-29.5(10-40)	82	±5	6	8	11	15.76(400)	5.07(2.3)
ZRAW-74ABSF	1/2"	180	25.8-44.3(35-60)	82	±5	6	10	11	15.76(400)	5.07(2.3)
ZRAW-745ABSF	1/2"	130	25.8-51.6(35-70)	82	±5	6	10	11	15.96(405)	5.73(2.6)
ZRAW-75ABSF	1/2"	100	29.5-88.5(40-120)	82	±5	6	13	11	15.96(405)	5.73(2.6)

Products and specifications subject to change without prior notice

Features Of Pulse Mechanism

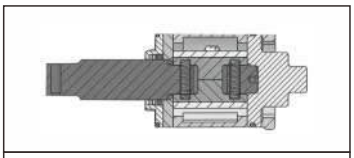

X-Shape Sealing improves repeatability and durability.

Twin drive roller blades reduce noise, vibration and improves impulse efficiency.

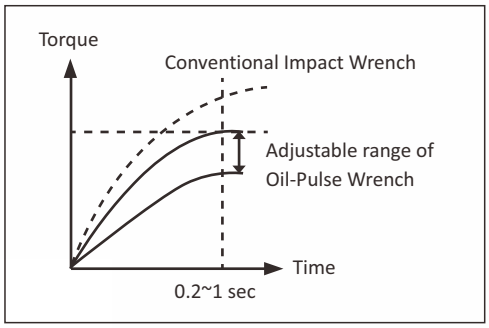

1 Piece design front end plate and cylinder improves motor efficiency.

One hand reverse operation for Right or Left handed operators.

Low noise exhaust, 360° adjustable.

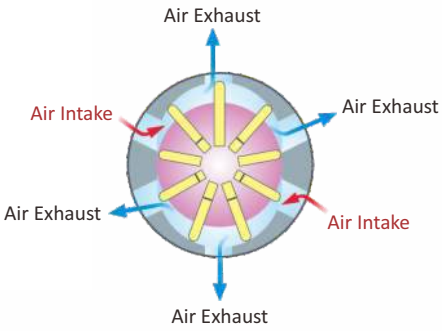

Double chamber air motor

9 Vanes motor design for smallest dimensions with highest power and acceleration results in a short time to reach the set torque and highest productivity.

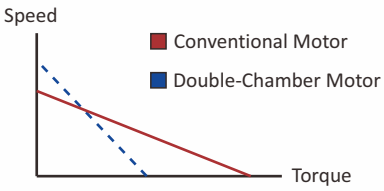

Easy Torque Adjustment

The required torque can be easily adjusted by turning the adjust screw through the housing.

Pulse Screwdriver (Pistol Type)

PS042
PS052 / PS062

Pistol Type | Specifications: Auto Shut-Off Type

PS072

Pistol Type | Specifications: Auto Shut-Off Type

Model	Square Drive	Bolt Size Capacity mm	Measured on Hard Joint / Lb-ft(Nm)						Free Speed rpm	Noise Level db(A)	Avg. Air Cons. m³/min	Net Weight lbs(kgs)
			Min. Oil Pressure			Max. Oil Pressure						
			0.4MPa	0.5MPa	0.6MPa	0.4MPa	0.5MPa	0.6MPa				
PS042	1/4"HEX	M4~M6	3(4)	3.7(5)	4.4(6)	6.6(9)	7.4(10)	8.1(11)	4500	80	0.4	2.34(1.06)
PS052	1/4"HEX	M5~M8	5.2(7)	5.9(8)	6.6(9)	12.5(17)	12.5(17)	14(19)	5800	85	0.4	2.34(1.06)
PS062	1/4"HEX	M6~M8	8.1(11)	8.9(12)	9.6(13)	14.8(20)	16.2(22)	18.4(25)	5800	85	0.43	2.38(1.08)
PS072	1/4"HEX	M8~M10	14.8(20)	14.8(20)	16.2(22)	22.1(30)	23.6(32)	25.8(35)	5500	88	0.45	2.87(1.3)

PN042
PN052 / PN062

Pistol Type | Specifications: Non Shut-Off Type

PN072

Pistol Type | Specifications: Non Shut-Off Type

Model	Square Drive	Bolt Size Capacity mm	Measured on Hard Joint / Lb-ft(Nm)						Free Speed rpm	Noise Level db(A)	Avg. Air Cons. m³/min	Net Weight lbs(kgs)
			Min. Oil Pressure			Max. Oil Pressure						
			0.4MPa	0.5MPa	0.6MPa	0.4MPa	0.5MPa	0.6MPa				
PN042	1/4"HEX	M5~M8	5.2(7)	6.6(9)	8.1(11)	7.4(10)	8.9(12)	10.3(14)	5600	80	0.4	2.1(0.95)
PN052	1/4"HEX	M6~M8	9.6(13)	11.8(16)	14(19)	11.8(16)	14(19)	15.5(21)	6000	85	0.4	2.1(0.95)
PN062	1/4"HEX	M6~M8	12.5(17)	14.8(20)	17(23)	17.7(24)	19.9(27)	22.1(30)	6000	85	0.43	2.08(0.94)
PN072	1/4"HEX	M8~M10	18.4(25)	20.7(28)	22.9(31)	26.6(36)	28.8(39)	31(42)	5500	88	0.45	2.98(1.35)

- Air Inlet Size: NPT 1/4"
- Recommended Gauge Air Pressure: 60~90psi(4kg/cm²~6kg/cm²)(0.4Mpa~0.6Mpa)
- Air Hose Size: 10mm x 6.5mm (for 042~062 model), 12mm x 8mm (for 072 model)
- Above DATA Are All Measured At 4kg/cm²~6kg/cm² Gauge Air Pressure

Products and specifications subject to change without prior notice

Pulse Wrench (Pistol Type)

PS043
PS053 / PS063

Pistol Type | Specifications: Auto Shut-Off Type

PS073 / PS084

Pistol Type | Specifications: Auto Shut-Off Type

Model	Square Drive	Bolt Size Capacity mm	Measured on Hard Joint / Lb-ft(Nm)						Free Speed rpm	Noise Level db(A)	Avg. Air Cons. m³/min	Net Weight lbs(kgs)
			Min. Oil Pressure			Max. Oil Pressure						
			0.4MPa	0.5MPa	0.6MPa	0.4MPa	0.5MPa	0.6MPa				
PS043	3/8"SD	M4~M6	3.7(5)	4.4(6)	5.2(7)	7.4(10)	8.1(11)	8.9(12)	4500	80	0.4	2.34(1.06)
PS053	3/8"SD	M6~M8	7.4(10)	8.1(11)	8.9(12)	14.8(20)	14.8(20)	17(23)	5800	85	0.4	2.34(1.06)
PS063	3/8"SD	M6~M8	8.1(11)	8.9(12)	9.6(13)	14.8(20)	16.2(22)	18.4(25)	5800	85	0.43	2.38(1.08)
PS073	3/8"SD	M8~M10	18.4(25)	20.7(28)	22.2(30)	26.6(36)	28.8(39)	31(42)	5500	88	0.45	2.87(1.3)
PS084	1/2"SD	M10~M12	22.2(30)	23.6(32)	25.1(34)	31.7(43)	34(46)	36.8(50)	5500	88	0.5	3.13(1.42)

PN043
PN053 / PN063

Pistol Type | Specifications: Non Shut-Off Type

PN073 / PN084

Pistol Type | Specifications: Non Shut-Off Type

Model	Square Drive	Bolt Size Capacity mm	Measured on Hard Joint / Lb-ft(Nm)						Free Speed rpm	Noise Level db(A)	Avg. Air Cons. m³/min	Net Weight lbs(kgs)
			Min. Oil Pressure			Max. Oil Pressure						
			0.4MPa	0.5MPa	0.6MPa	0.4MPa	0.5MPa	0.6MPa				
PN043	3/8"SD	M6~M8	6.6(9)	8.1(11)	9.6(13)	9.6(13)	11.1(15)	12.5(17)	5600	80	0.4	2.1(0.95)
PN053	3/8"SD	M6~M8	11.1(15)	13.3(18)	15.5(21)	14(19)	16.2(22)	18.4(25)	5800	85	0.4	2.1(0.95)
PN063	3/8"SD	M8~M10	14.8(20)	17(23)	19.2(26)	20.7(28)	22.9(31)	25.1(34)	5800	85	0.43	2.08(0.94)
PN073	3/8"SD	M8~M10	20.7(28)	22.9(31)	25.1(34)	31(42)	33.2(45)	35.4(48)	5500	88	0.45	2.98(1.35)
PN084	1/2"SD	M10~M12	18.4(25)	19.9(27)	23.6(32)	28(38)	31.7(43)	38.4(52)	5500	88	0.5	2.98(1.35)

- Air Inlet Size: NPT 1/4"
- Recommended Gauge Air Pressure: 60~90psi(4kg/cm²~6kg/cm²)(0.4Mpa~0.6Mpa)
- Air Hose Size: 10mm x 6.5mm (for 043~063 model), 12mm x 8mm (for 073~084 model)
- Above DATA Are All Measured At 4kg/cm²~6kg/cm² Gauge Air Pressure

Pulse Screwdriver (In Line Type)

SS042 / SS052
SS062 / SS072

In Line Type | Specifications: Auto Shut-Off Type

Model	Square Drive	Bolt Size Capacity mm	Measured on Hard Joint / Lb-ft(Nm)						Free Speed rpm	Noise Level db(A)	Avg. Air Cons. m³/min	Net Weight lbs(kgs)
			Min. Oil Pressure			Max. Oil Pressure						
			0.4MPa	0.5MPa	0.6MPa	0.4MPa	0.5MPa	0.6MPa				
SS042	1/4"HEX	M4~M6	3(4)	3.7(5)	4.4(6)	6.6(9)	7.4(10)	8.1(11)	4500	80	0.4	1.92(0.87)
SS052	1/4"HEX	M5~M8	5.2(7)	5.9(8)	6.6(9)	12.5(17)	12.5(17)	14(19)	6000	85	0.4	1.87(0.85)
SS062	1/4"HEX	M6~M8	8.1(11)	8.9(12)	9.6(13)	14.8(20)	16.2(22)	18.4(25)	6000	85	0.4	1.94(0.88)
SS072	1/4"HEX	M8~M10	14.8(20)	14.8(20)	17(23)	22.1(30)	23.6(32)	25.8(35)	6000	88	0.45	2.84(1.29)

SN042 / SN052
SN062 / SN072

In Line Type | Specifications: Non Shut-Off Type

Model	Square Drive	Bolt Size Capacity mm	Measured on Hard Joint / Lb-ft(Nm)						Free Speed rpm	Noise Level db(A)	Avg. Air Cons. m³/min	Net Weight lbs(kgs)
			Min. Oil Pressure			Max. Oil Pressure						
			0.4MPa	0.5MPa	0.6MPa	0.4MPa	0.5MPa	0.6MPa				
SN042	1/4"HEX	M5~M8	5.2(7)	6.6(9)	8.1(11)	7.4(10)	8.9(12)	10.3(14)	5600	80	0.4	1.92(0.87)
SN052	1/4"HEX	M6~M8	9.6(13)	11.8(16)	14(19)	11.8(16)	14(19)	15.5(21)	6000	85	0.4	1.87(0.85)
SN062	1/4"HEX	M6~M8	12.5(17)	14.8(20)	17(23)	17.7(24)	19.9(27)	22.1(30)	6000	85	0.4	1.94(0.88)
SN072	1/4"HEX	M8~M10	18.4(25)	20.7(28)	22.9(31)	26.6(36)	28.8(39)	31(42)	6000	88	0.45	2.84(1.29)

- Air Inlet Size: NPT 1/4"
- Recommended Gauge Air Pressure: 60~90psi(4kg/cm²~6kg/cm²)(0.4Mpa~0.6Mpa)
- Air Hose Size: 10mm x 6.5mm (for 042~062 model), (for 072 model)
- Above DATA Are All Measured At 4kg/cm²~6kg/cm² Gauge Air Pressure

Products and specifications subject to change without prior notice

Pulse Wrench (In Line Type)

SS043
SS053 / SS063
SS073 / SS084

In Line Type | Specifications: Auto Shut-Off Type

SN043
SN053 / SN063
SN073 / SN084

In Line Type | Specifications: Non Shut-Off Type

Model	Square Drive	Bolt Size Capacity mm	Measured on Hard Joint / Lb-ft(Nm)						Free Speed rpm	Noise Level db(A)	Avg. Air Cons. m³/min	Net Weight lbs(kgs)
			Min. Oil Pressure			Max. Oil Pressure						
			0.4MPa	0.5MPa	0.6MPa	0.4MPa	0.5MPa	0.6MPa				
SS043	3/8"SD	M4~M6	3.7(5)	4.4(6)	5.2(7)	7.4(10)	8.1(11)	8.9(12)	4500	80	0.4	1.92(0.87)
SS053	3/8"SD	M6~M8	7.4(10)	8.1(11)	8.9(12)	14.8(20)	14.8(20)	17(23)	6000	85	0.4	1.87(0.85)
SS063	3/8"SD	M6~M8	8.1(11)	8.9(12)	9.6(13)	14.8(20)	16.2(22)	18.4(25)	6000	85	0.4	1.94(0.88)
SS073	3/8"SD	M8~M10	14.8(20)	14.8(20)	17(23)	26.6(36)	28.8(39)	31(42)	6000	88	0.45	2.84(1.29)
SS084	1/2"SD	M10~M12	9.6(13)	11.1(15)	12.5(17)	28(38)	31(42)	34.7(47)	6000	88	0.45	2.87(1.3)
SN043	3/8"SD	M6~M8	6.6(9)	8.1(11)	9.6(13)	9.6(13)	11.1(15)	12.5(17)	5600	80	0.4	1.92(0.87)
SN053	3/8"SD	M6~M8	11.1(15)	18(13.3)	15.5(21)	14(19)	16.2(22)	18.4(25)	6000	85	0.4	1.87(0.85)
SN063	3/8"SD	M8~M10	14.8(20)	17(23)	19.2(26)	20.7(28)	22.9(31)	25.1(34)	6000	85	0.4	1.94(0.88)
SN073	3/8"SD	M8~M10	20.7(28)	22.9(31)	25.1(34)	31(42)	33.2(45)	35.4(48)	6000	88	0.45	2.84(1.29)
SN084	1/2"SD	M10~M12	20.7(28)	22.9(31)	24.3(33)	33.2(45)	36.9(50)	42(57)	6000	88	0.45	2.87(1.3)

- Air Inlet Size: NPT 1/4"
- Recommended Gauge Air Pressure: 60~90psi(4kg/cm²~6kg/cm²)(0.4Mpa~0.6Mpa)
- Air Hose Size: 10mm x 6.5mm (for 043~063 model), (for 073~084 model)
- Above DATA Are All Measured At 4kg/cm²~6kg/cm² Gauge Air Pressure

ZPO-1L

Synthetic pulse tool oil

Features

- New ZPO-1L is a fully synthetic hydraulic oil formulated with the most advanced technology and superior than other similar oils in the field.
- Applicable to all Pulse tools.
- Exceptional torque and auto shut off performance under environment temperature as low as 15°C.
- Great wear resistance to prolong the life of metal components.

MADE IN USA

built for service

What was born out of necessity for durable and safe equipment has grown into a full portfolio of industrial tooling products designed by engineers and end-users under the strictest quality requirements in stateof-the-art manufacturing facilities.

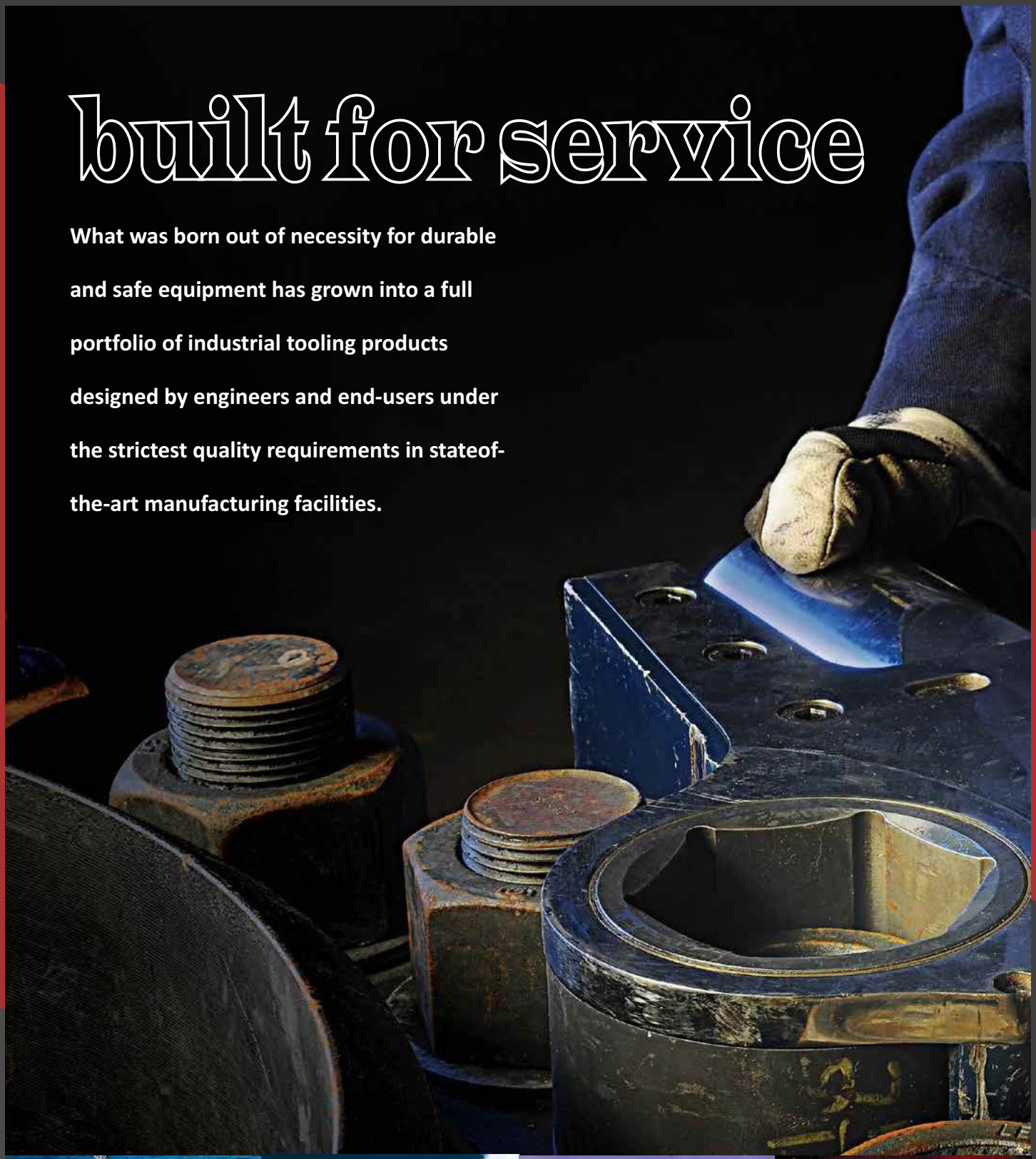

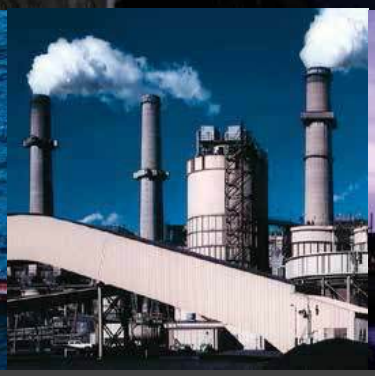

Cyclone Magnum Pneumatic Torque Wrench

The future of pneumatic torquing is here. The Cyclone Magnum features an optional digital torque readout, purpose built motor, industry-leading gear durability and numerous ergonomic features. The Cyclone Magnum is the new leader in torque accuracy (+/-5%), durability and comfort.

High Precision Air Motor
Performance tested on a dynamometer to verify optimum speed, power and torque

Robust Gear Box Design
To minimize gear tooth stress and maximize durability

Removable Drive — Hex Inserts
Accessories available as an added option

Reaction Bar
Custom options available upon request

Toggle Trigger Feature
For quick forward/reverse direction control

Thru-Handle Exhaust
To safely direct exhaust away from user

Multi-Axis Hose Swivel
For added ease of use and to prevent hose kinking

Digital Display Screen
Available as an added option for quick torque and pressure readings (**ZATXXXDR-CMPLT**)

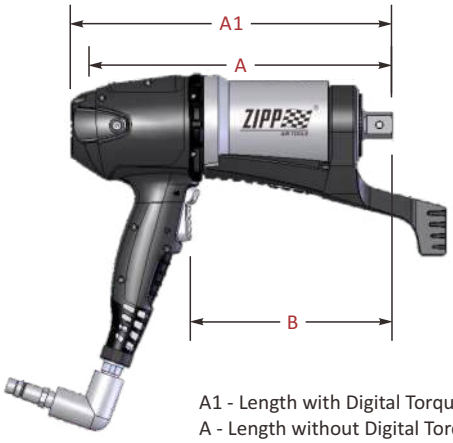

A1 - Length with Digital Torque Readout
A - Length without Digital Torque Readout

Start torquing efficiently today!
Reduce your project downtime!

US PATENT NO. D638,682S
CANADIAN PATENT NO. 139501
EUROPEAN REGISTERED DESIGN NO. 001834300-0001
REGISTERED DESIGN NO. 001834300-0002
CHINA AND TAIWAN PATENT PENDING

Model	Square Drive Size	Torque Range ft-lbs(Nm)	Dimension A1 inch(mm)	Dimension A inch(mm)	Dimension B inch(mm)	Ring Diameter inch(mm)	Net Weight lbs(kgs)
ZAT400CMPLT	3/4"	44-400(60-540)	9.85(250.3)	9.7(247.2)	5.4(136.3)	2.25(57.2)	10.2(4.6)
ZAT400DR-CMPLT	3/4"	44-400(60-540)	9.85(250.3)	9.7(247.2)	5.4(136.3)	2.25(57.2)	10.2(4.6)
ZAT800CMPLT	3/4"	88-800(120-1100)	9.85(250.1)	9.7(247.1)	5.1(129.8)	2.97(75.3)	11.9(5.4)
ZAT800DR-CMPLT	3/4"	88-800(120-1100)	9.85(250.1)	9.7(247.1)	5.1(129.8)	2.97(75.3)	11.9(5.4)
ZAT1800CMPLT	1"	200-1800(275-2450)	12.12(307.9)	11.7(297.5)	7.5(191.3)	3.42(86.9)	17.7(8)
ZAT1800DR-CMPLT	1"	200-1800(275-2450)	12.12(307.9)	11.7(297.5)	7.5(191.3)	3.42(86.9)	17.7(8)
ZAT3000CMPLT	1"	333-3000(450-4070)	13(330)	12.8(326.9)	8.6(220.2)	3.8(96.5)	22.8(10.3)
ZAT3000DR-CMPLT	1"	333-3000(450-4070)	13(330)	12.8(326.9)	8.6(220.2)	3.8(96.5)	22.8(10.3)

Removable Drives for Low-Cost Maintenance (Note: Use of hex drives may require special reaction bars.)

Hex Size	5/8"	3/4"	7/8"	1"	1-1/4"	14mm	17mm	19mm	22mm
ZAT400	ZAT400-HX1	ZAT400-HX2				ZAT400-HX7	ZAT400-HX8	ZAT400-HX9	
ZAT800	ZAT800-HX1	ZAT800-HX2				ZAT800-HX7	ZAT800-HX8	ZAT800-HX9	
ZAT1800		ZAT1800-HX2	ZAT1800-HX3	ZAT1800-HX4			ZAT1800-HX8	ZAT1800-HX9	ZAT1800-HX10
ZAT3000		ZAT3000-HX2	ZAT3000-HX3	ZAT3000-HX4	ZAT3000-HX5			ZAT3000-HX9	ZAT3000-HX10

ZLW Series Lightweight Aluminum Square Drive Hydraulic Wrench

The ZLW square drive hydraulic wrench is the most efficient and heavily used tool in any turnaround trailer. Used for disassembly and reassembly, the ZLW offers unparalleled performance and durability for getting the job completed on time and with an accurate torque control of +/-5%

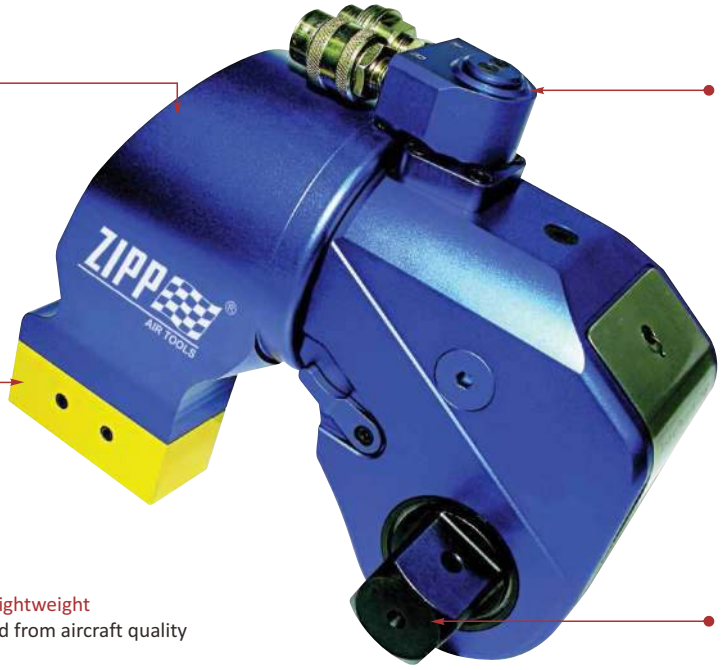

Trigger Style Reaction Bar with Spline Adjustment
Proper reaction point setting increases torque accuracy. Quickly adjust the reaction bar to the precise reaction point

360-Degree Swivel
Easily adjust twin lines to avoid work interference

High-Strength Steel Reaction Surface
Increases tool durability, and ensures a rigid reaction surface

Compact/Lightweight
Constructed from aircraft quality aluminum

Quick Release Drives
Efficiently change from assembly to disassembly using the quick release design.
Hex drives are also available

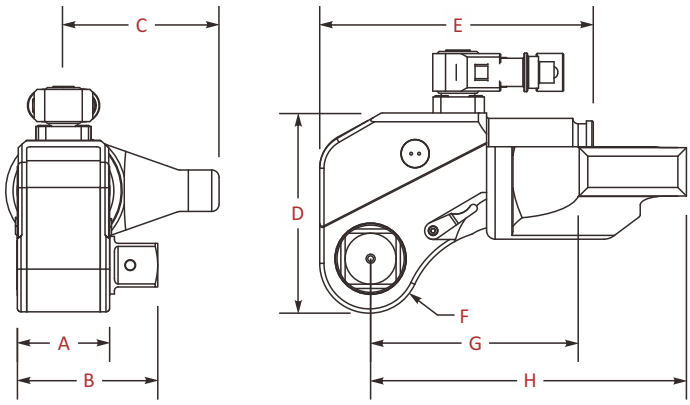

DURABILITY...
original square drive has been in service since 1991.

Maximum Operating Pressure 10000 psi (700 bar)

Model	Drive Size inch	Max. Torque ft-lb(Nm)	Dimension A inch(mm)	Dimension B inch(mm)	Dimension C inch(mm)	Dimension D inch(mm)	Dimension E inch(mm)	Dimension F inch(mm)	Dimension G inch(mm)	Dimension H inch(mm)	Weight with Reaction Bar lbs(kgs)
ZLW1	3/4	1282(1738)	1.99(50.5)	2.86(72.6)	3.63(92.2)	3.81(96.8)	5.74(145.8)	1.03(26.2)	3.37(85.6)	6.89(175)	5.5(2.5)
ZLW3	1	3250(4406)	2.70(68.6)	3.77(95.8)	4.9(124.5)	5.04(128)	7.07(179.6)	1.35(34.3)	4.48(114)	9.09(230.9)	11(5)
ZLW5	1-1/2	5552(7528)	3.18(80.8)	4.88(124)	5.56(141.2)	5.92(150.4)	8.36(212.3)	1.55(39.4)	5.44(138.2)	10.74(272.8)	17(7.8)
ZLW8	1-1/2	7500(10169)	3.57(90.7)	5.32(135.1)	6.55(166.4)	6.63(168.4)	8.81(223.8)	1.87(47.5)	6.07(154.2)	11.63(295.4)	24(10.9)
ZLW10	1-1/2	11000(14914)	3.97(100.8)	5.64(143.3)	7.07(179.6)	7.23(183.6)	9.74(247.4)	2.02(51.3)	6.11(155.2)	12.6(320)	33(15)
ZLW20	2-1/2	19050(25828)	4.76(120.9)	7.27(184.7)	8.46(214.9)	8.73(221.7)	12.21(310.1)	2.34(59.4)	7.38(187.5)	15.22(386.6)	58(26.3)
ZLW25	2-1/2	24500(33218)	5.44(138.2)	7.94(201.7)	9.05(229.9)	9.81(249.2)	12.82(325.6)	2.62(66.5)	7.90(200.7)	15.92(404.4)	77(34.9)
ZLW35	2-1/2	34400(46640)	6.07(154.2)	8.58(217.9)	9.67(245.6)	11.2(284.4)	14.79(375.7)	3.06(77.7)	9.57(243.1)	18.48(469.4)	110(49.9)

Products and specifications subject to change without prior notice

TorqLinks
MASTER THE ART OF BOLTING

ZTL Series Low Clearance / Direct Fit Hydraulic Wrench

Designed to fit where no other tool will go. The Torque Link low clearance torque wrench is the best solution for tightening in a constrained space environment. The TL eliminates side loading issues through in-line reaction and offers a controlled torque accuracy of +/-3%. The integrated cylinder eliminates the need to match cylinders to links and ensures that every TL in your fleet is operationally ready to perform.

360-Degree Swivel
Easily adjust twin lines to avoid work interference

Lightweight
Highest torque/weight ratio in the industry

Durability
Ultra high-strength materials for unsurpassed durability, reliability and performance

Small Nose Radius
Ensures strong fit in the tightest of spots

Integrated Cylinder
Improves torque accuracy and repeatability and ensures operational readiness

Optional High-Strength
Steel Reaction Surface
Increases tool durability and ensures a rigid reaction surface

Large Range of Sizes
Standard hex sizes up to 6-1/8.
Custom hex sizes and torque ranges available

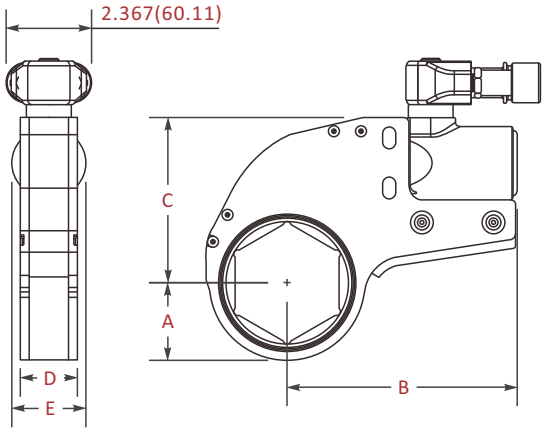

Custom torque wrench solutions available D upon request.

Item Number with Swivel and Aluminum Reaction Surface	Item Number with Swivel and Steel Reaction Surface	Hexagon Size	Max. Torque ft-lb(Nm)	Dimension A inch(mm)	Dimension B inch(mm)	Dimension C inch(mm)	Dimension D inch(mm)	Dimension E inch(mm)	Weight with Swivel and Aluminum Reaction Surface Weight lbs(kgs)
ZTL210625	ZTL210625-S	1-1/16"	1336(1812)	0.96(24.2)	4.769(121.1)	2.834(72)	1.280(32.5)	1.563(39.7)	5(2.3)
ZTL227MM	ZTL227MM-S	27mm	1336(1812)	0.96(24.2)	4.769(121.1)	2.834(72)	1.280(32.5)	1.563(39.7)	5(2.3)
ZTL21250	ZTL21250-S	1-1/4"	1336(1812)	1.07(27.2)	4.775(121.3)	2.807(71.3)	1.264(32.1)	1.563(39.7)	5.1(2.3)
ZTL230MM	ZTL230MM-S	30mm	1336(1812)	1.07(27.2)	4.775(121.3)	2.807(71.3)	1.264(32.1)	1.563(39.7)	5.1(2.3)
ZTL214375	ZTL214375-S	1-7/16"	1451(1968)	1.17(29.8)	5.002(127.1)	3(76.2)	1.264(32.1)	1.563(39.7)	5.1(2.3)
ZTL234MM	ZTL234MM-S	34mm	1451(1968)	1.17(29.8)	5.002(127.1)	3(76.2)	1.264(32.1)	1.563(39.7)	5.1(2.3)
ZTL236MM	ZTL236MM-S	36mm	1451(1968)	1.17(29.8)	5.002(127.1)	3(76.2)	1.264(32.1)	1.563(39.7)	5.1(2.3)
ZTL21625	ZTL21625-S	1-5/8"	1499(2033)	1.29(32.8)	5.002(127.1)	3.097(78.7)	1.264(32.1)	1.563(39.7)	5.2(2.3)
ZTL241MM	ZTL241MM-S	41mm	1499(2033)	1.29(32.8)	5.002(127.1)	3.097(78.7)	1.264(32.1)	1.563(39.7)	5.2(2.3)
ZTL218125	ZTL218125-S	1-13/16	1543(2092)	1.39(35.3)	5.079(129)	3.162(80.3)	1.264(32.1)	1.563(39.7)	5.2(2.4)
ZTL246MM	ZTL246MM-S	46mm	1543(2092)	1.39(35.3)	5.079(129)	3.162(80.3)	1.264(32.1)	1.563(39.7)	5.2(2.4)
ZTL22000	ZTL22000-S	2"	1579(2141)	1.47(37.3)	5.073(128.9)	3.223(81.9)	1.264(32.1)	1.563(39.7)	5.3(2.4)
ZTL250MM	ZTL250MM-S	50mm	1579(2141)	1.47(37.3)	5.073(128.9)	3.223(81.9)	1.264(32.1)	1.563(39.7)	5.3(2.4)
ZTL221875	ZTL221875-S	2-3/16"	1640(2224)	1.569(39.9)	5.074(128.9)	3.279(83.3)	1.264(32.1)	1.563(39.7)	5.5(2.5)
ZTL255MM	ZTL255MM-S	55mm	1640(2224)	1.569(39.9)	5.074(128.9)	3.279(83.3)	1.264(32.1)	1.563(39.7)	5.5(2.5)
ZTL22375	ZTL22375-S	2-3/8"	1576(2137)	1.7(43.2)	5.221(132.6)	3.479(88.4)	1.264(32.1)	1.563(39.7)	5.7(2.6)
ZTL258MM	ZTL258MM-S	58mm	1576(2137)	1.7(43.2)	5.221(132.6)	3.479(88.4)	1.264(32.1)	1.563(39.7)	5.7(2.6)
ZTL260MM	ZTL260MM-S	60mm	1576(2137)	1.7(43.2)	5.221(132.6)	3.479(88.4)	1.264(32.1)	1.563(39.7)	5.7(2.6)

MADE IN USA

Direct Fit Hydraulic Wrench

Specifications (continued)

Item Number with Swivel and Aluminum Reaction Surface	Item Number with Swivel and Steel Reaction Surface	Hexagon Size	Max. Torque ft-lb(Nm)	Dimension A inch(mm)	Dimension B inch(mm)	Dimension C inch(mm)	Dimension D inch(mm)	Dimension E inch(mm)	Weight with Swivel and Aluminum Reaction Surface Weight lbs(kgs)
ZTL418125	ZTL418125-S	1-13/16"	3800(5153)	1.47(37.3)	6.065(154.1)	3.929(99.8)	1.875(47.6)	2.036(51.7)	9.2(4.2)
ZTL446MM	ZTL446MM-S	46mm	3800(5153)	1.47(37.3)	6.065(154.1)	3.929(99.8)	1.875(47.6)	2.036(51.7)	9.2(4.2)
ZTL42000	ZTL42000-S	2"	3956(5364)	1.6(40.6)	6.11(155.2)	4.217(107.1)	1.625(41.3)	2.036(51.7)	10(4.5)
ZTL450MM	ZTL450MM-S	50mm	3956(5364)	1.6(40.6)	6.11(155.2)	4.217(107.1)	1.625(41.3)	2.036(51.7)	10(4.5)
ZTL421875	ZTL421875-S	2-3/16"	3989(5409)	1.72(43.7)	6.182(157)	4.209(106.9)	1.625(41.3)	2.036(51.7)?	10.5(4.8)
ZTL455MM	ZTL455MM-S	55mm	3989(5409)	1.72(43.7)	6.182(157)	4.209(106.9)	1.625(41.3)	2.036(51.7)	10.5(4.8)
ZTL42375	ZTL42375-S	2-3/8"	4007(5433)	1.83(46.5)	6.186(157.1)	4.288(108.9)	1.625(41.3)	2.036(51.7)	10.6(4.8)
ZTL458MM	ZTL458MM-S	58mm	4007(5433)	1.83(46.5)	6.186(157.1)	4.288(108.9)	1.625(41.3)	2.036(51.7)	10.6(4.8)
ZTL460MM	ZTL460MM-S	60mm	4007(5433)	1.83(46.5)	6.186(157.1)	4.288(108.9)	1.625(41.3)	2.036(51.7)	10.6(4.8)
ZTL425625	ZTL425625-S	2-9/16"	3988(5408)	1.95(49.5)	6.318(160.5)	4.5(114.3)	1.625(41.3)	2.036(51.7)	10.8(4.9)
ZTL465MM	ZTL465MM-S	65mm	3988(5408)	1.95(49.5)	6.318(160.5)	4.5(114.3)	1.625(41.3)	2.036(51.7)	10.8(4.9)
ZTL42750	ZTL42750-S	2-3/4"	4057(5501)	2.04(51.8)	6.393(162.4)	4.52(114.8)	1.625(41.3)	2.036(51.7)	10.9(5)
ZTL470MM	ZTL470MM-S	70mm	4057(5501)	2.04(51.8)	6.393(162.4)	4.52(114.8)	1.625(41.3)	2.036(51.7)	10.9(5)
ZTL429375	ZTL429375-S	2-15/16"	4086(5541)	2.16(54.9)	6.374(161.9)	4.618(117.3)	1.625(41.3)	2.036(51.7)	11(5)
ZTL43125	ZTL43125-S	3-1/8"	4220(5722)	2.26(57.4)	6.574(167)	4.725(120)	1.625(41.3)	2.036(51.7)	11.1(5)
ZTL475MM	ZTL475MM-S	75mm	4220(5722)	2.26(57.4)	6.574(167)	4.725(120)	1.625(41.3)	2.036(51.7)	11.1(5)
ZTL480MM	ZTL480MM-S	80mm	4220(5722)	2.26(57.4)	6.574(167)	4.725(120)	1.625(41.3)	2.036(51.7)	11.1(5)
ZTL82000	ZTL82000-S	2"	7531(10212)	1.749(44.4)	7.578(192.5)	4.927(125.2)	2.25(57.2)	2.54(64.5)	19.6(8.9)
ZTL850MM	ZTL850MM-S	50mm	7531(10212)	1.749(44.4)	7.578(192.5)	4.927(125.2)	2.25(57.2)	2.54(64.5)	19.6(8.9)
ZTL821875	ZTL821875-S	2-3/16"	7945(10773)	1.85(47)	7.708(195.8)	4.927(125.2)	2.25(57.2)	2.54(64.5)	19.6(8.9)
ZTL855MM	ZTL855MM-S	55mm	7945(10773)	1.85(47)	7.708(195.8)	4.927(125.2)	2.25(57.2)	2.54(64.5)	19.6(8.9)
ZTL82375	ZTL82375-S	2-3/8"	8100(10984)	1.94(49.3)	7.67(194.8)	4.927(125.2)	2.25(57.2)	2.54(64.5)	19.7(8.9)
ZTL858MM	ZTL858MM-S	58mm	8100(10984)	1.94(49.3)	7.67(194.8)	4.927(125.2)	2.25(57.2)	2.54(64.5)	19.7(8.9)
ZTL860MM	ZTL860MM-S	60mm	8100(10984)	1.94(49.3)	7.67(194.8)	4.927(125.2)	2.25(57.2)	2.54(64.5)	19.7(8.9)
ZTL825625	ZTL825625-S	2-9/16"	8165(11072)	2.02(51.3)	7.67(194.8)	4.99(126.8)	2.25(57.2)	2.54(64.5)	19.9(9)
ZTL865MM	ZTL865MM-S	65mm	8165(11072)	2.02(51.3)	7.67(194.8)	4.99(126.8)	2.25(57.2)	2.54(64.5)	19.9(9)
ZTL82750	ZTL82750-S	2-3/4"	8029(10887)	2.15(54.6)	7.762(197.2)	5.11(129.8)	2.25(57.2)	2.54(64.5)	20.2(9.2)
ZTL870MM	ZTL870MM-S	70mm	8029(10887)	2.15(54.6)	7.762(197.2)	5.11(129.8)	2.25(57.2)	2.54(64.5)	20.2(9.2)
ZTL829375	ZTL829375-S	2-15/16"	8095(10977)	2.23(56.6)	7.91(200.9)	5.22(132.6)	2.25(57.2)	2.54(64.5)	20.5(9.3)
ZTL83125	ZTL83125-S	3-1/8"	7921(10741)	2.33(59.2)	7.977(202.6)	5.22(132.6)	2.25(57.2)	2.54(64.5)	21(9.5)
ZTL875MM	ZTL875MM-S	75mm	7921(10741)	2.33(59.2)	7.977(202.6)	5.22(132.6)	2.25(57.2)	2.54(64.5)	21(9.5)
ZTL880MM	ZTL880MM-S	80mm	7921(10741)	2.33(59.2)	7.977(202.6)	5.22(132.6)	2.25(57.2)	2.54(64.5)	21(9.5)
ZTL83500	ZTL83500-S	3-1/2"	8351(11324)	2.56(65)	8.039(204.2)	5.593(142.1)	2.25(57.2)	2.54(64.5)	22(10)
ZTL885MM	ZTL885MM-S	85mm	8351(11324)	2.56(65)	8.039(204.2)	5.593(142.1)	2.25(57.2)	2.54(64.5)	22(10)
ZTL83875	ZTL83875-S	3-7/8"	8093(10974)	2.78(70.6)	8.278(210.3)	5.753(146.1)	2.25(57.2)	2.54(64.5)	23(10.4)
ZTL890MM	ZTL890MM-S	90mm	8093(10974)	2.78(70.6)	8.278(210.3)	5.753(146.1)	2.25(57.2)	2.54(64.5)	23(10.4)
ZTL895MM	ZTL895MM-S	95mm	8093(10974)	2.78(70.6)	8.278(210.3)	5.753(146.1)	2.25(57.2)	2.54(64.5)	23(10.4)
ZTL1429375	ZTL1429375-S	2-15/16"	12865(17445)	2.439(62)	9.247(234.9)	6.25(158.8)	2.9(73.7)	3.1(78.7)	36.7(16.6)
ZTL143125	ZTL143125-S	3-1/8"	13091(17751)	2.537(64.4)	9.373(238.1)	6.486(164.8)	2.9(73.7)	3.1(78.7)	38.7(17.5)
ZTL1475MM	ZTL1475MM-S	75mm	13091(17751)?	2.537(64.4)	9.373(238.1)	6.486(164.8)	2.9(73.7)	3.1(78.7)	38.7(17.5)
ZTL1480MM	ZTL1480MM-S	80mm	13091(17751)	2.537(64.4)	9.373(238.1)	6.486(164.8)	2.9(73.7)	3.1(78.7)??	38.7(17.5)
ZTL143500	ZTL143500-S	3-1/2"	14272(19353)	2.73(69.3)	9.455(240.2)	6.486(164.8)	2.75(69.9)	3.1(78.7)	37.1(16.8)
ZTL1485MM	ZTL1485MM-S	85mm	14272(19353)	2.73(69.3)	9.455(240.2)	6.486(164.8)	2.75(69.9)	3.1(78.7)	37.1(16.8)
ZTL143875	ZTL143875-S	3-7/8"	14140(19174)	2.88(73.2)	9.561(242.9)	6.486(164.8)	2.5(63.5)	3.1(78.7)	34.9(15.8)
ZTL1490MM	ZTL1490MM-S	90mm	14140(19174)	2.88(73.2)	9.561(242.9)	6.486(164.8)	2.5(63.5)	3.1(78.7)	34.9(15.8)
ZTL1495MM	ZTL1495MM-S	95mm	14140(19174)	2.88(73.2)	9.561(242.9)	6.486(164.8)	2.5(63.5)	3.1(78.7)	34.9(15.8)
ZTL144250	ZTL144250-S	4-1/4"	14172(19217)	3.07(78)	9.667(245.5)	6.806(172.9)	2.5(63.5)	3.1(78.7)	36(16.3)
ZTL14100MM	ZTL14100MM-S	100mm	14172(19217)	3.07(78)	9.667(245.5)	6.806(172.9)	2.5(63.5)	3.1(78.7)	36(16.3)
ZTL14105MM	ZTL14105MM-S	105mm	14172(19217)	3.07(78)	9.667(245.5)	6.806(172.9)	2.5(63.5)	3.1(78.7)	36(16.3)
ZTL144625	ZTL144625-S	4-5/8"	14030(19025)	3.25(82.6)	9.667(245.5)	6.983(177.4)	2.5(63.5)	3.1(78.7)	36.4(16.5)
ZTL14110MM	ZTL14110MM-S	110mm	14030(19025)	3.25(82.6)	9.667(245.5)	6.983(177.4)	2.5(63.5)	3.1(78.7)	36.4(16.5)
ZTL14115MM	ZTL14115MM-S	115mm	14030(19025)	3.25(82.6)	9.667(245.5)	6.983(177.4)	2.5(63.5)	3.1(78.7)	36.4(16.5)
ZTL203500	ZTL203500-S	3-1/2"	18052(24479)	2.771(70.4)	10.947(278.1)	6.85(174)	2.75(69.9)	3.625(92.1)	50.2(22.8)
ZTL2085MM	ZTL2085MM-S	85mm	18052(24479)	2.771(70.4)	10.947(278.1)	6.85(174)	2.75(69.9)	3.625(92.1)	50.2(22.8)
ZTL203875	ZTL203875-S	3-7/8"	19153(25971)	3.011(76.5)	10.987(279.1)	7.092(180.1)	2.75(69.9)	3.625(92.1)	50(22.7)
ZTL2090MM	ZTL2090MM-S	90mm	19153(25971)	3.011(76.5)	10.987(279.1)	7.092(180.1)	2.75(69.9)	3.625(92.1)	50(22.7)
ZTL2095MM	ZTL2095MM-S	95mm	19153(25971)	3.011(76.5)	10.987(279.1)	7.092(180.1)	2.75(69.9)	3.625(92.1)	50(22.7)
ZTL204250	ZTL204250-S	4-1/4"	20755(28144)	3.322(84.4)	11.580(294.1)	7.46(189.5)	2.75(69.9)	3.625(92.1)	55.8(25.3)
ZTL20100MM	ZTL20100MM-S	100mm	20755(28144)	3.322(84.4)	11.580(294.1)	7.46(189.5)	2.75(69.9)	3.625(92.1)	55.8(25.3)
ZTL20105MM	ZTL20105MM-S	105mm	20755(28144)	3.322(84.4)	11.580(294.1)	7.46(189.5)	2.75(69.9)	3.625(92.1)	55.8(25.3)
ZTL204625	ZTL204625-S	4-5/8"	20132(27299)	3.455(87.8)	11.682(296.7)	7.667(194.7)	2.75(69.9)	3.625(92.1)	57.1(25.9)
ZTL20110MM	ZTL20110MM-S	110mm	20132(27299)	3.455(87.8)	11.682(296.7)	7.667(194.7)	2.75(69.9)	3.625(92.1)	57.1(25.9)
ZTL20115MM	ZTL20115MM-S	115mm	20132(27299)	3.455(87.8)	11.682(296.7)	7.667(194.7)	2.75(69.9)	3.625(92.1)	57.1(25.9)
ZTL205000	ZTL205000-S	5"	20249(27458)	3.731(94.8)	11.925(302.9)	7.837(199.1)	2.75(69.9)	3.625(92.1)	58.4(26.5)
ZTL20120MM	ZTL20120MM-S	120mm	20249(27458)	3.731(94.8)	11.925(302.9)	7.837(199.1)	2.75(69.9)	3.625(92.1)	58.4(26.5)
ZTL205375	ZTL205375-S	5-3/8"	20000(27120)	3.896(99)	11.972(304.1)	8.144(206.9)	2.75(69.9)	3.625(92.1)	59(26.8)
ZTL20135MM	ZTL20135MM-S	135mm	20000(27120)	3.896(99)	11.972(304.1)	8.144(206.9)	2.75(69.9)	3.625(92.1)	59(26.8)
ZTL304250	ZTL304250-S	4-1/4"	31690(42972)	3.367(85.5)	12.466(316.6)	8.313(211.2)	3.24(82.3)	4.25(108)	76(34.5)
ZTL30100MM	ZTL30100MM-S	100mm	31690(42972)	3.367(85.5)	12.466(316.6)	8.313(211.2)	3.24(82.3)	4.25(108)	76(34.5)
ZTL30105MM	ZTL30105MM-S	105mm	31690(42972)	3.367(85.5)	12.466(316.6)	8.313(211.2)	3.24(82.3)	4.25(108)	76(34.5)
ZTL304625	ZTL304625-S	4-5/8"	31690(42972)	3.56(90.4)	12.466(316.6)	8.313(211.2)	3.24(82.3)	4.25(108)	76(34.5)
ZTL30110MM	ZTL30110MM-S	110mm	31690(42972)	3.56(90.4)	12.466(316.6)	8.313(211.2)	3.24(82.3)	4.25(108)	76(34.5)
ZTL20115MM	ZTL20115MM-S	115mm	31690(42972)	3.56(90.4)	12.466(316.6)	8.313(211.2)	3.24(82.3)	4.25(108)	76(34.5)
ZTL205000	ZTL205000-S	5"	30329(41126)	3.82(97)	12.872(327)	8.371(212.6)	3.24(82.3)	4.25(108)	76(34.5)
ZTL30120MM	ZTL30120MM-S	120mm	30329(41126)	3.82(97)	12.872(327)	8.371(212.6)	3.24(82.3)	4.25(108)	76(34.5)
ZTL305375	ZTL305375-S	5-3/8"	30985(42016)	3.936(100)	12.871(326.9)	8.371(212.6)	3.24(82.3)	4.25(108)	76(34.5)
ZTL30135MM	ZTL30135MM-S	135mm	30985(42016)	3.936(100)	12.871(326.9)	8.371(212.6)	3.24(82.3)	4.25(108)	76(34.5)
ZTL305750	ZTL305750-S	5-3/4"	32279(43770)	4.1(104.1)	12.871(326.9)	8.815(223.9)	3.24(82.3)	4.25(108)	78(35.4)
ZTL306125	ZTL306125-S	6-1/8"	32031(43434)	4.22(107.2)	12.871(326.9)	8.694(220.8)	3.24(82.3)	4.25(108)	79(35.8)
ZTL30150MM	ZTL30150MM-S	150mm	32031(43434)	4.22(107.2)	12.871(326.9)	8.694(220.8)	3.24(82.3)	4.25(108)	79(35.8)
ZTL30155MM	ZTL30155MM-S	155mm	32031(43434)	4.22(107.2)	12.871(326.9)	8.694(220.8)	3.24(82.3)	4.25(108)	79(35.8)

Products and specifications subject to change without prior notice

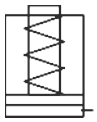

ZNSC Series

Capacity: 5-90 ton
Bolt Range: M6-M48
Hex. Nut Range: 10-75 mm
Maximum Operating Pressure: 700 bar

Hydraulic Nut Splitter

- Specially designed "tool steel" cutter blade penetrates the nut to the precise point where it cracks, stopping short of the bolt threads.
- Applications include servicing trucks, piping industry, tank cleaning, petrochemical, steel construction and mining.
- Heavy-duty chisels can be reground.
- Sing-acting, spring return cylinder.
- Unique angled head allows flush access.
- Compact and ergonomic design, easy to use.

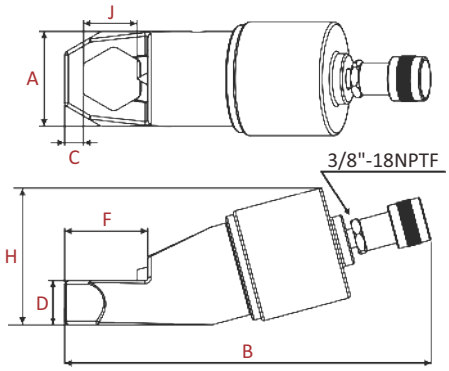

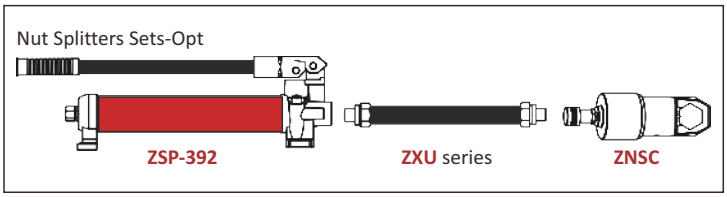

Model Number	Hex. Nut Range		Bolt Range		Capacity	Oil Capacity	Dimensions (mm)							Weight
	inch	mm	inch	mm	ton	cm³	A	B	C	D	F	H	J	kg
ZNSC-1319	0.5-0.75	13-19	0.31-0.5	M8-M12	5	15	40	200	6	19	28	48	21	1.1
ZNSC-1924	0.75-0.94	19-24	0.5-0.63	M1-M16	10	20	55	227	8	25	38	71	25	2
ZNSC-2432	0.94-1.13	24-32	0.63-0.88	M16-M22	15	60	66	260	10	31	49	76	33	3.4
ZNSC-3241	1.13-1.56	32-41	0.88-1.13	M22-M27	20	80	75	286	15	35	56	89	43	5.8
ZNSC-4150	1.56-2	41-50	1.13-1.38	M27-M33	35	155	96	325	21	45	73	109	54	11.7
ZNSC-5060	2-2.25	50-60	1.38-1.5	M33-M39	50	240	106	366	27	54	92	126	60	15.4
ZNSC-6075	2.38-2.88	60-75	1.5-1.88	M39-M48	90	492	156	366	27	75	110	180	78	38.9

ZWSR Series

Capacity: 1 ton
Tip Clearance: 17.4mm
Maximum Spread: 96.5 mm
Maximum Operating Pressure: 700 bar

Hydraulic Wedgie and Spread Cylinder

- Single-acting, spring return.
- For use in very confined work areas.

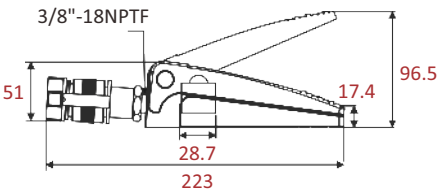

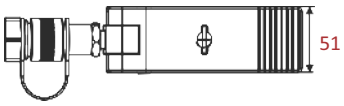

Model Number	Cylinder Capacity	Tip clearance	Maximum Spread	Cylinder Effective Area	Oil Capacity	Weight
	ton(kN)	mm	mm	cm²	cm³	kg
ZWSR-1	1(8.9)	17.4	96.5	6.5	10	2.3

ZSWR & ZSWRM Series

maximum Spread Force: 5-90 ton
Tip Clearance/ Max. Spread[1]: 6/81 mm
Maximum Operating Pressure: 700 bar
1)Using Stepped block.

Hydraulic Spreader

- Only requests an access gap of 0.24" (6mm).
- Automatic mechanical retraction.
- Unique interlocking: no first step bending and risk of slipping out of joint.

Model Number	Max. Spread Force	Tip clearance	Maximum Spread	Oil Capacity	Weight
	ton(kN)	mm	mm	c.c	kg
ZSWR-40	14(125)	6	81	78	7.1
ZSWR-401	14.5(145)	6	81	152	8
ZSWR-8	8(72)	6	81	–	6.5

ZSWR-40

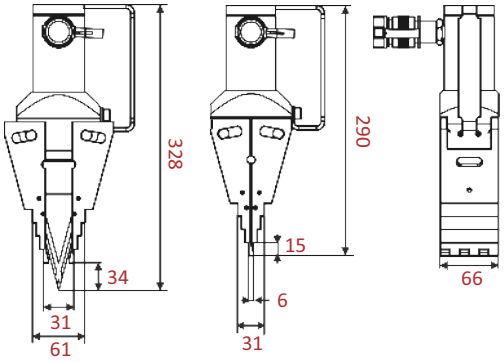

ZSWR-8

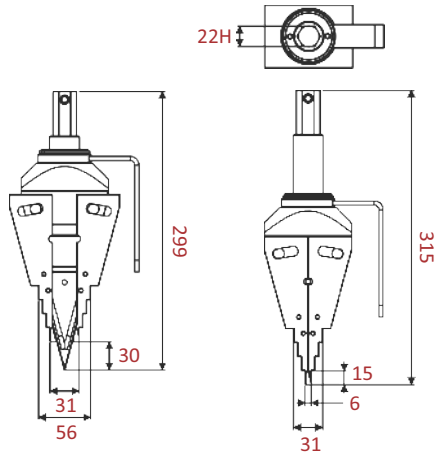

ZSWR-401

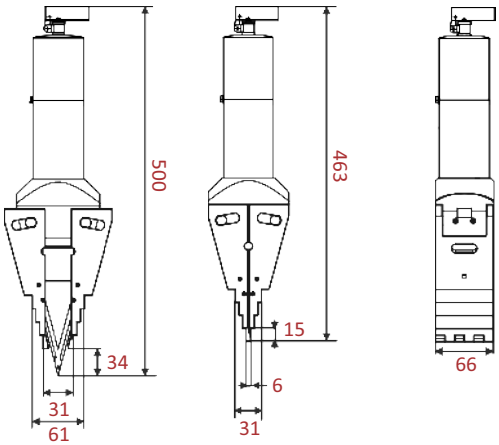

Equipped fitting

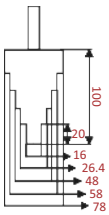

ZSWRSB1
Safety Block

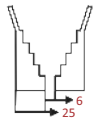

ZSWRFSB
Stepped Block

Equipped fitting

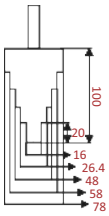

ZSWRSB1
Safety Block

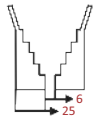

ZSWRFSB
Stepped Block

Products and specifications subject to change without prior notice

- For simultaneously and even spreading of flange joints, 180° apart with ZSWR-40.

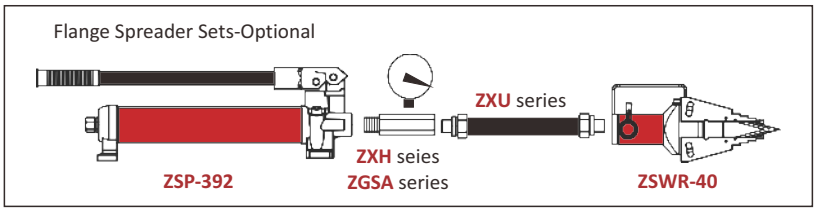

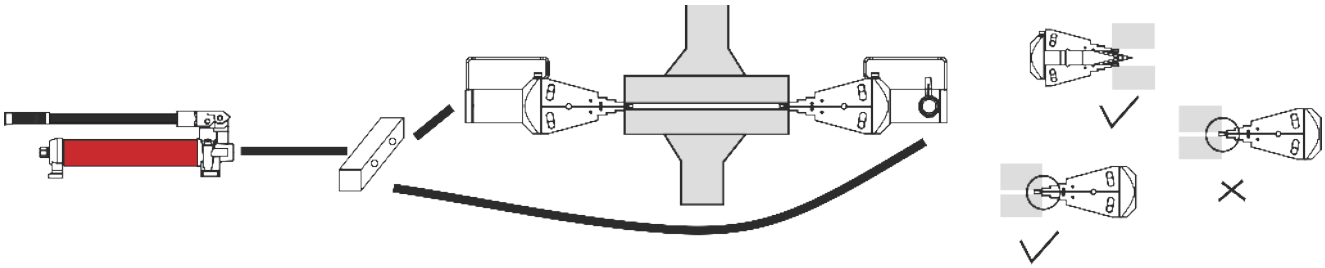

ZSWF Series

Capacity: 5 ton
Tip Clearance/ Max. Spread: 23/76 mm
Maximum Operating Pressure: 700 bar

Hydraulic Spreader

- Jaws open parallel.
- Complete metal structure.

Model Number	Capacity	Spread	Oil Capacity	Weight
	ton	Min./Max. (mm)	c.c	kg
ZSWF-5	5	23/76	81.9	6.2
ZSWF-10ST	10	3.7/103.7	160	6.35

ZSWF-10ST

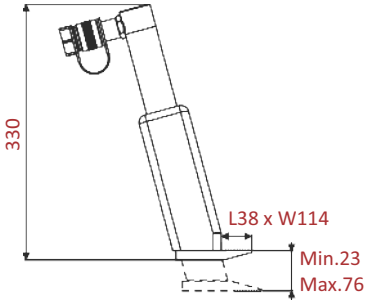

ZSWF-5

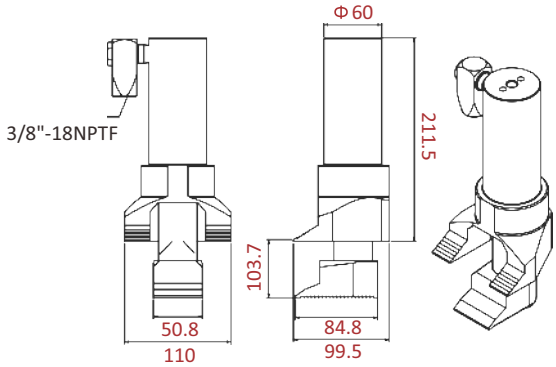

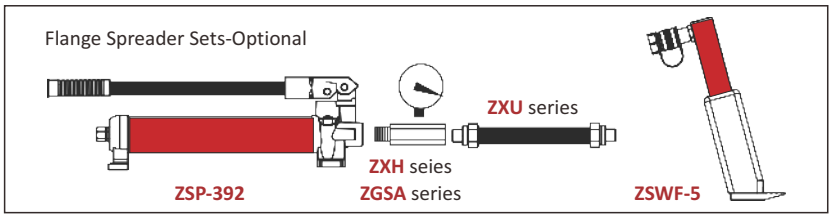

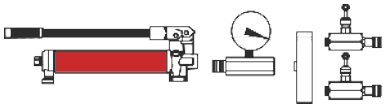

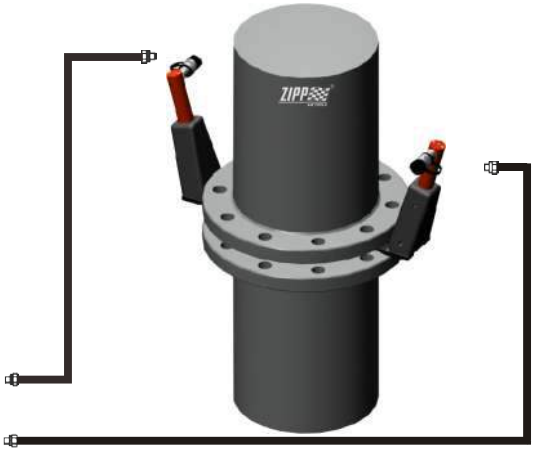

ZLSW Series

Maximum Spread Force:
16(157) ton(kN)
Min. Clearance/ Max. Lift Ht.[1]:
9.9/51.3-69.1[1] mm
Maximum Operating Pressure: 700 bar

1) Using Stepped block ZSWRFSB to increase wedge lifting height 30mm.

Hydraulic Vertical Lifting Wedge

- Require 0.39" (9.9mm) access gap.
- Lifting force 16 ton at 700bar hydraulic pressure.
- Automatic mechanical retraction (single acting spring return).
- Securely raises or lowers 16 tons with no slippage.
- Lifting wedge ZLSW-16 includes safety block ZSLW-C1-16.
- Use in tandem to lift 32 tons, or 64 tons.
- 21.1mm of vertical lift from each step (maximum lift to 69.1mm with optional ZSLW-C2-16 stepped block).
- Each step can spread under full load.
- Unique interlocking wedge design, no first step bending and risk of slipping out.

ZLSW-16

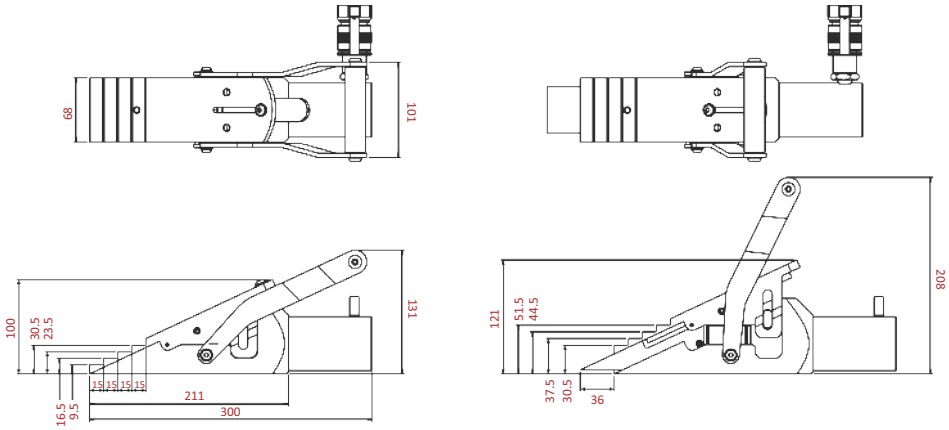

ZLSW-161

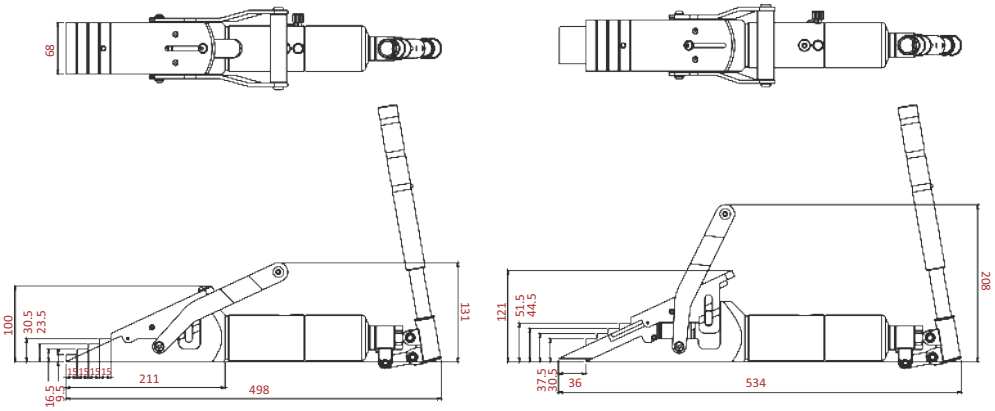

Optional fitting

ZSLW16-A07
Stepped Block

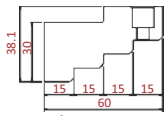

Optional ZLSLW-C2-16
Stepped Block

Equipped fitting

Stock Box

ZSLW-C1-16
Safety Block

Control Manifolds

- Control Manifold to control two or four lifting wedges simultaneously.

Model Number	Max. Spread Force	Minimum clearance Gap	Max. Lift per Stage	Max. Lift Ht.	Max. Lift Ht. Using stepped bock	Oil Capacity	Weight
	ton(kN)	mm	mm	mm	mm	c.c	kg
ZLSW-16	16(157)	9.9	21.1	51.3	69.1	78	7
ZLSW-161	16(157)	9.9	21.1	51.3	69.1	152	7

Products and specifications subject to change without prior notice

Hydraulic Fixed Flange Alignment Tool

ZFSA Series

Minimum Bolt Size: 16-31.5 mm

Flange Wall Thickness: 16-31.5 mm

Capacity: 1-10(10-90) ton(kN)

Maximum Operating Pressure: 700 bar
(Just for ZSFA-9TE)

Hydraulic Fixed Flange Alignment Tool

- The Flange Alignment tools can be used to align or re-align flange joints during pipework construction, commissioning or during routine maintenance.
- The tool is attached to the flange joint where misalignment is at its greatest and then simply push and pull the flanges into correct alignment (exceot ZSFA-9TE).
- The Flange Alignment tools rectify twist and rotational misalignment quickly, safely and without the need for an external power source.
- Appropriate for use on most ANSI, API, BS and DIN flanges.
- No slings, hooks or lifting gear required.
- Can be installed and used in any position (horizontally or vertically).
- Portable, lightweight design enables easy transport and use, even in remote locations.

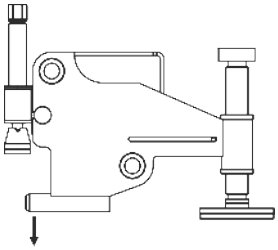

MAX. LOAD 4T

ZFSA-4TM

For use on medium diameter, medium pressure flanges.
Mechanical Fixed Flange and Rotational Alignment Tool.

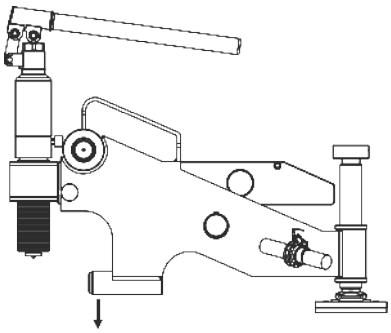

MAX. LOAD 9T

ZFSA-9TM

For use on larger diameter, higher pressure flanges.
Mechanical Fixed Flange and Rotational Alignment Tool.

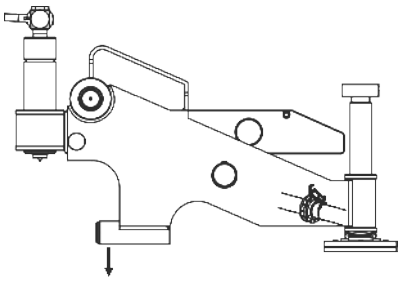

MAX. LOAD 9T

ZFSA-9TE

For use on larger diameter, higher pressure flanges.
Hydraulic Fixed Flange and Rotational Alignment Tool.

Hydraulic Fixed Flange Alignment Tool

ZFSA-4TM

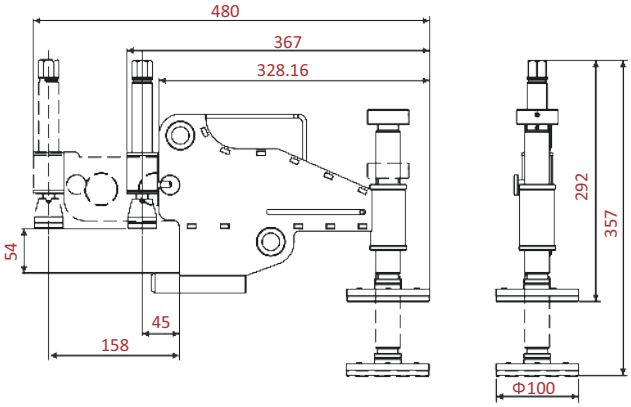

ZFSA-9TM

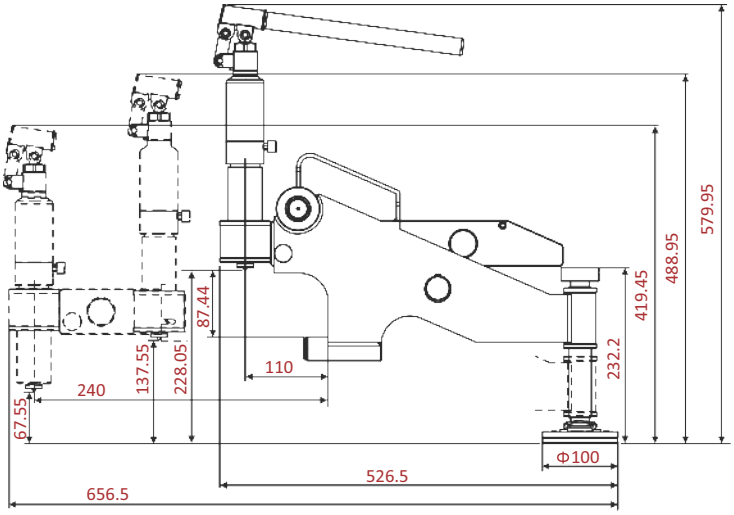

ZFSA-9TE

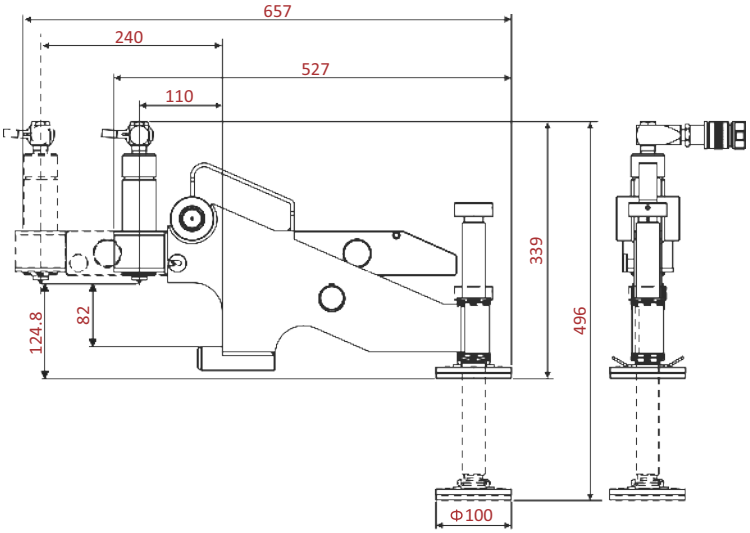

Model Number	Max. Lifting Force	Min. Bolt Size	Flange wall Thickness (including gap between flanges)	Weight
	ton(kN)	inch(mm)	inch(mm)	kg
ZFSA-4TM	4(40)	0.95(24)	1.18-5.23(30-133)	8.6
ZFSA-9TM	10(90)	1.24(31.5)	3.66-9(93-228)	16.5
ZFSA-9TE	10(90)	1.24(31.5)	3.66-9(93-228)	16.5

Equipped fitting

Stock Box

Fixed belt

Products and specifications subject to change without prior notice

ZSMX

Square Drive Wrenches

Lightweight High Power Wrench for Sockets or Allen-key

- Dual Pawl Mechanism-Heavy duty.
- 360 degree Reaction Arm-Easy to working in any position.
- One-way Ratchet-the only way to assure hands-free and multi-tool operation.
- Aviation material Body housing-Aluminum-Titaniumalloy and high strength steel.
- Anti-Rust Finish-Special surface treatment.
- Small Operating Radius.
- "Drop Hole" will protect over pressure operating.
  Torque Accuracy ±3%
  Repeatability 100%

WARNING

Warning wrong coupler connect or over pressure which leaking oil.

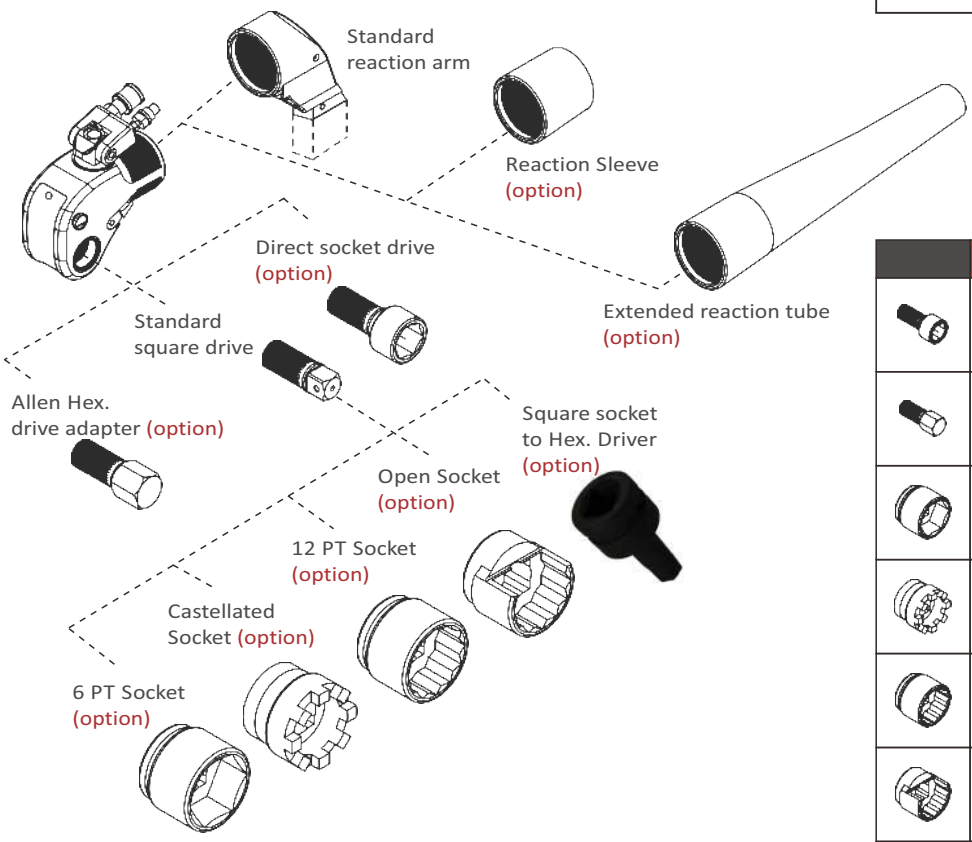

	How to build Torque Wrench drive and socket
	Model DS Hex. Socket size Example: ZSMX-3DS1-13/16"
	Model AH Hex. Drive size Example: ZSMX-3AH32mm
	Z6PTS- Drive size - Socket size Example: Z6PTS-1"-50
	ZCS- Drive size - Socket size Example: ZCS-1"-2-3/4"
	Z12PTS- Drive size - Socket size Example: Z12TPS-1"-50
	ZOPS- Drive size - Socket size Example: ZOPS-1"-6PT50
	ZSMX-4F Square socket Hex. Drive Example: ZSMX-4F1"-6M22mm

Square Drive Wrenches

Model Number	Square Drive	Min. Torque		Max. Torque		Bolt size	Motor	
	inch	lbf.ft	N.m	lbf.ft	N.m	mm	lb	kg
ZSMX-1	3/4	201	273	1409	1911	16-36	5.29	2.4
ZSMX-3	1	475	645	3328	4512	22-48	11.34	5.35
ZSMX-5	1-1/2	810	1099	5672	7690	27-56	19.5	9.08
ZSMX-8	1-1/2	1136	1540	6951	10780	30-64	28.2	13.97
ZSMX-10	1-1/2	1670	2264	11688	15847	36-72	35.9	16
ZSMX-20	2-1/2	2864	3883	20049	27183	42-90	66.98	30.41
ZSMX-25	2-1/2	3659	4961	25611	34725	48-100	85.9	39
ZSMX-35	2-1/2	5376	7289	37632	51022	64-120	95.15	43.2

Model Number	Square Drive	L1		L2		H1		H2		H3		H4		R1		R2	
	inch	inch	mm	inch	mm	inch	mm	inch	mm	inch	mm	inch	mm	inch	mm	inch	mm
ZSMX-1	3/4	4.92	125	7.56	192	1.96	50	2.8	71	3.56	90.5	5.13	130.5	0.97	24.7	4.48	113.7
ZSMX-3	1	6.35	161	9.58	243	2.63	66.8	3.7	94	4.87	123.7	6.52	165.7	1.29	33	5.26	133.7
ZSMX-5	1-1/2	8.22	209	10.63	270	3.14	80	4.8	122	5.86	149	7.62	193.5	1.53	39	5.47	139
ZSMX-8	1-1/2	8.74	222	11.57	294	3.54	90	5.11	130	6.57	167	8.61	218.6	1.85	47	6.02	153
ZSMX-10	1-1/2	9.56	243	14.52	369	3.93	100	5.67	144	7.34	186.6	9.08	230.7	1.95	49.7	7.94	202
ZSMX-20	2-1/2	12.2	310	15.24	387	4.72	120	7.2	183	8.66	220	10.71	272	2.32	59	7.32	186
ZSMX-25	2-1/2	12.99	330	16.06	408	5.38	136.6	7.83	198.9	9.72	247	11.77	299	2.59	66	7.79	198
ZSMX-35	2-1/2	13.89	353	21.22	539	5.81	147.8	8.62	218.7	10.9	276.9	12.35	313.9	2.98	75.7	12.68	322.1

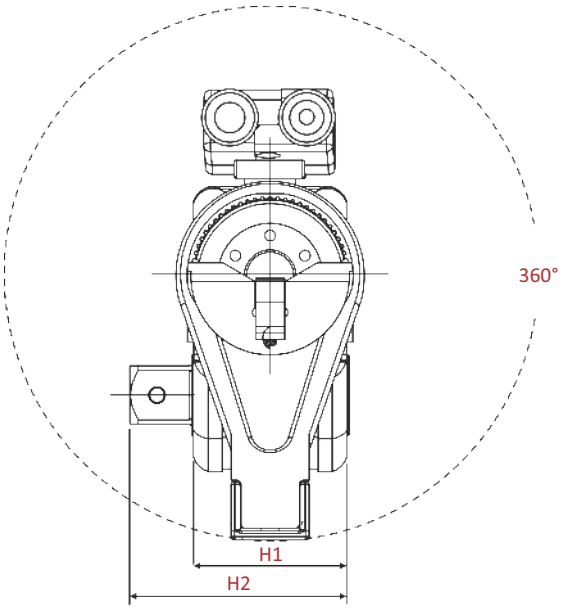

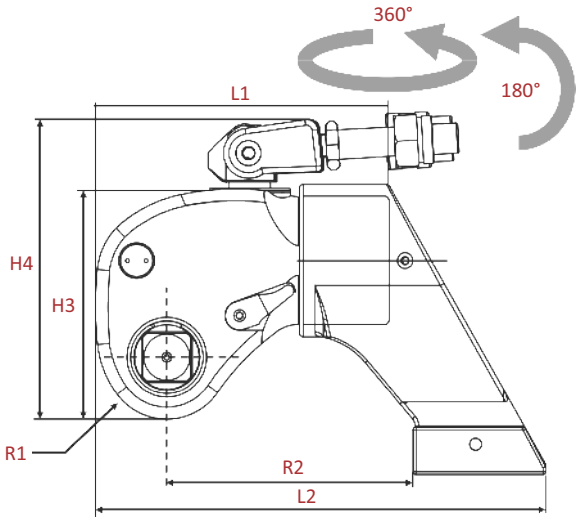

Reaction arm
small tooth orientation

Fixed Button

Small tooth driver

Products and specifications subject to change without prior notice

Square Drive Wrenches

SMX Series Torque Conversion Chart																						
Work pressure		ZSMX-1			ZSMX-3			ZSMX-5			ZSMX-8			ZSMX-10			ZSMX-20			ZSMX-25		
psi	bar	lbf.ft	kgf.m	N.n	lbf.ft	kgf.m	N.n	lbf.ft	kgf.m	N.n	lbf.ft	kgf.m	N.n	lbf.ft	kgf.m	N.n	lbf.ft	kgf.m	N.n	lbf.ft	kgf.m	N.n
1450	100	201	28	273	475	66	645	810	112	1099	1136	157	1540	1670	231	2264	2864	396	3883	3659	506	4961
1740	120	242	33	328	571	79	774	972	134	1318	1363	188	1848	2004	277	2717	3437	475	4660	4391	607	5953
2031	140	282	39	382	666	92	902	1134	157	1538	1590	220	2156	2338	323	3169	4010	554	5437	5122	708	6945
2321	160	322	45	437	761	105	1031	1296	179	1758	1817	251	2464	2672	369	3622	4583	634	6213	5854	809	7937
2611	180	362	50	491	856	118	1160	1459	202	1977	2044	283	2772	3006	416	4075	5155	713	6990	6586	911	8929
2901	200	403	56	546	951	131	1289	1621	224	2197	2272	314	3080	3339	462	4528	5728	792	7766	7318	1012	9921
3191	220	443	61	601	1046	145	1418	1783	246	2417	2499	345	3388	3673	508	4980	6301	871	8543	8049	1113	10913
3481	240	483	67	655	1141	158	1547	1945	269	2637	2726	377	3696	4007	554	5433	6874	950	9320	8781	1214	11906
3771	260	524	72	710	1236	171	1676	2107	291	2856	2953	408	4004	4341	600	5886	7447	1030	10096	9513	1315	12898
4061	280	564	78	761	1331	184	1805	2269	314	3076	3180	440	4312	4675	646	6339	8020	1109	10873	10245	1416	13890
4351	300	604	84	819	1426	197	1934	2431	336	3296	3407	471	4620	5009	693	6792	8592	1188	11650	10976	1518	14882
4641	320	644	89	874	1521	210	2063	2593	358	3515	3635	503	4928	5343	739	7244	9165	1267	12426	11708	1619	15874
4931	340	685	95	928	1616	223	2192	2755	381	3735	3862	534	5236	5677	785	7697	9738	1346	13203	12440	1720	16866
5221	360	725	100	983	1712	237	2321	2917	403	3955	4089	565	5544	6011	831	8150	10311	1426	13980	13172	1821	17858
5511	380	765	106	1037	1807	250	2449	3079	426	4175	4316	597	5852	6345	877	8603	10884	1505	14756	13903	1922	18850
5802	400	805	111	1092	1902	263	2578	3241	448	4394	4543	628	6160	6679	923	9055	11457	1584	15533	14635	2023	19843
6092	420	846	117	1147	1997	276	2707	3403	471	4614	4770	660	6468	7013	970	9508	12029	1663	16310	15367	2125	20835
6382	440	886	122	1201	2092	289	2836	3565	493	4834	4998	691	6776	7347	1016	9961	12602	1742	17086	16099	2226	21827
6672	460	926	128	1256	2187	302	2965	3727	515	5054	5225	722	7084	7681	1062	10414	13175	1822	17863	16830	2327	22819
6962	480	966	134	1310	2282	316	3094	3889	538	5273	5452	754	7392	8015	1108	10866	13748	1901	18640	17562	2428	23811
7252	500	1007	139	1365	2377	329	3223	4051	560	5493	5679	785	7700	8349	1154	11319	14321	1980	19416	18294	2529	24803
7542	520	1047	145	1420	2472	342	3352	4213	583	5713	5906	817	8008	8683	1200	11772	14893	2059	20193	19026	2630	25795
7832	540	1087	150	1474	2567	355	3481	4376	605	5932	6133	848	8316	9017	1247	12225	15466	2138	20969	19757	2732	26787
8122	560	1128	156	1529	2662	368	3610	4538	627	6152	6361	879	8624	9350	1293	12678	16039	2217	21746	20489	2833	27780
8412	580	1168	161	1583	2757	381	3739	4700	650	6372	6588	911	8932	9684	1339	13130	16612	2297	22523	21221	2934	28772
8702	600	1208	167	1638	2853	394	3868	4862	672	6592	6815	942	9240	10018	1385	13583	17185	2376	23299	21953	3035	29764
8992	620	1248	173	1693	2948	408	3997	5024	695	6811	7042	974	9548	10352	1431	14036	17758	2455	24076	22684	3136	30756
9282	640	1289	178	1747	3043	421	4125	5186	717	7031	7269	1005	9856	10686	1477	14489	18330	2534	24853	23416	3237	31748
9572	660	1329	184	1802	3138	434	4254	5348	739	7251	7496	1036	10164	11020	1524	14941	18903	2613	25629	24148	3339	32740
9863	680	1369	189	1856	3233	447	4383	5510	762	7470	7724	1068	10472	11354	1570	15394	19476	2693	26406	24880	3440	33732
10153	700	1409	195	1911	3328	460	4512	5672	784	7690	7951	1099	10780	11688	1616	15847	20049	2772	27183	25611	3541	34725

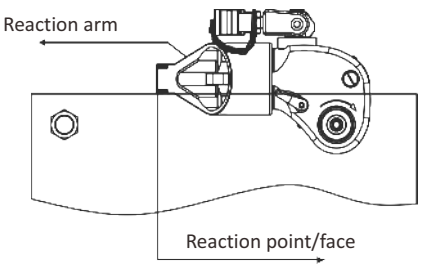

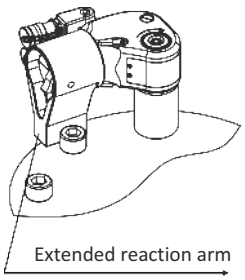

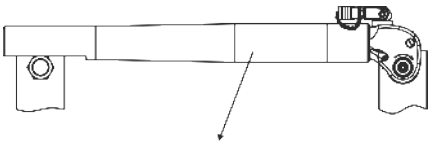

Square Drive Wrenches

SMX Series Torque Conversion Chart				
Work pressure		ZSMX-35		
psi	bar	lbf.ft	kgf.m	N.n
1450	100	5376	743	7289
1740	120	6451	892	8747
2031	140	7526	1041	10204
2321	160	8601	1189	11662
2611	180	9677	1338	13120
2901	200	10752	1486	14578
3191	220	11827	1635	16035
3481	240	12902	1784	17493
3771	260	13977	1932	18951
4061	280	15053	2081	20409
4351	300	16128	2230	21866
4641	320	17203	2378	23324
4931	340	18278	2527	24782
5221	360	19353	2676	26240
5511	380	20429	2824	27697
5802	400	21504	2973	29155
6092	420	22579	3122	30613
6382	440	23654	3270	32071
6672	460	24729	3419	33528
6962	480	25804	3568	34986
7252	500	26880	3716	36444
7542	520	27955	3865	37902
7832	540	29030	4014	39359
8122	560	30105	4162	40817
8412	580	31180	4311	42275
8702	600	32256	4459	43733
8992	620	33331	4608	45190
9282	640	34406	4757	46648
9572	660	35481	4905	48106
9863	680	36556	5054	49564
10153	700	37632	5203	51022

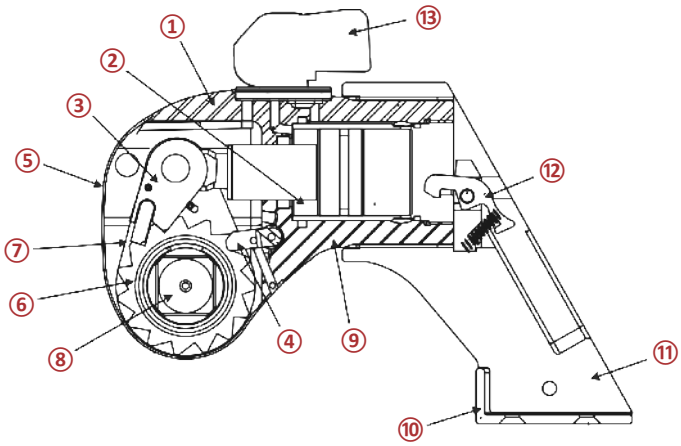

①		**High-strength Aluminum Alloy Housing** ZSMX series housing processed from solid block of 7075 AQ Aluminum and anti-rust finish-special surface treatment.
②		**Strong piston Assembly** Smooth leak proof functioning of enclosed alloy steel piston and single seal provides required torque.
③		**Driving Segment** Ensures tool will never lock up.
④		**Anti-Back & Lock** Allows hands free working.
⑤		**Laser Engraved Torque Chart** Two sided shroud is laser engraved with the torque chart for the ZSMX series.
⑥		**Multi-Tooth Driving & Ratchet Assembly** Strong strength, high accuracy and best speed.
⑦		**Drive Plate** High strength alloy drive plate for maximum life. Allows small nose radius for the tool.
⑧		**Square Driving** "Push through" Square Drive that easily pushes through to switch from loosens to tighten.
⑨		**Direct Housing Reaction** Allows use without reaction arm.
⑩		**Steel Reaction Boot** Replaceable pad allowing on site change over. Protects costly replacement of reaction arm.
⑪		**Long Length Reaction Arm** Long length reaction arm allows multi positioning. Allows taking reaction on most applications.
⑫		**Reaction Arm Release Button** Housed within the reaction arm as a safety feature, protecting the arm from accidental disengagement.
⑬		360°*180° Swivel-Hose-Free Operation

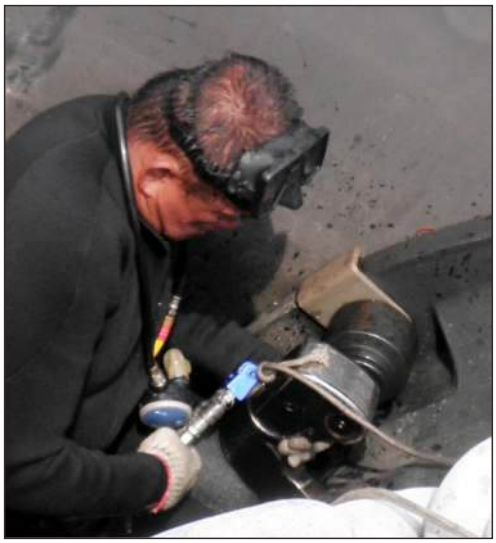

Products and specifications subject to change without prior notice

ZSRX

Double-Acting, Hexagon Cassette Wrenches

Lightweight, Low Profile & Slim Nose Radius

- Tool body can be Reaction Arm, easy to work.
- Bronze bushing anti galling.
- "Drop Hole" will protect over pressure operating.
  Output Accuracy: ±3% ,
  Repeatability: 100%

Opt
Removable handle

One plug to connect

WARNING

Warning drop hole

Warning wrong coupler connect or over pressure which leaking oil.

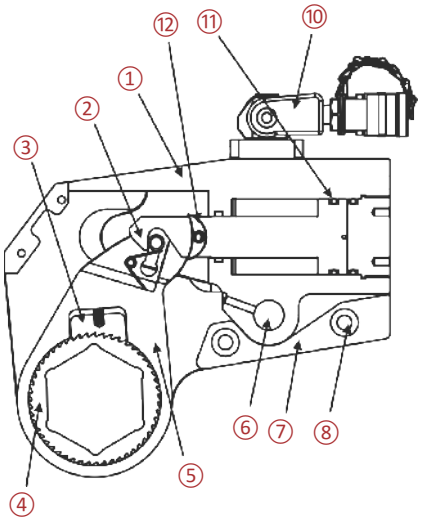

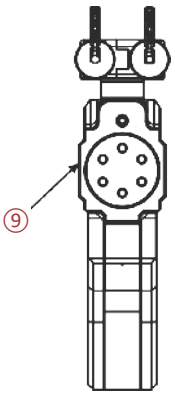

①		**High Strength Body** Cylinder and Link Body are manufactured from high grade and strength alloy. Rust-resistant surface finish.
②		**Engagement Plunger** Smooth leak proof functioning of enclosed alloy steel piston and engaged hook head.
③		**Never Lock Drive Segment** Never lock drive segment does not let the wrench lock and thus eliminates the requirement of a ratchet release mechanism.
④		**Multi Tooth Ratchet Assembly** Strong strength, high accuracy and best speed.
⑤		**Drive Plate** Single piece high strength alloy drive plate for maximum life. Allows small nose radius for the tool.
⑥		**Multi-Tooth Driving & Ratchet Assembly** Strong strength, high accuracy and best speed.
⑦		**Steel Link Pin** One simple pin for cassette link to cylinder engagement without using any additional or special tool.
⑧		**In-line Reaction Pad** This ensures torsion free reaction during use.
⑨		**Completely Flat Design Cylinder & Link** Equal width of cylinder and link ensures tool sits flat on flange surface. Allows use in most confined areas.
⑩		360°*180° Swivel-Hose-Free Operation
⑪		**Piston Seal** High temperature Polyurethane seals ensure years of maintenance free operation.
⑫		**Sliders** Reduce friction and prevent wear on the piston.

Hydraulic Direct Fit Wrench

Model Number	Hex. Size		Min. Torque		Max. Torque		Weight (kg)		Dimensions (mm)			
	inch	mm	lbf.ft	N.m	lbf.ft	N.m	Cylinder	Link	A	B	C	D
ZSRX-2	1-1/4~2-3/8	30~60	192	260	2178	2994	1.99	1.48~1.85	32	148.8~156.8	168~175.5	9.1~11.7
ZSRX-4	1-5/8~3-1/8	41~80	395	535	4732	6504	3.35	3.05~3.95	41.4	172.9~189.2	204.4~220.8	12.7~13.7
ZSRX-8	1-7/8~4-1/8	50~105	830	1125	10689	14692	6.64	6.25~8.6	52.5	210.4~235.4	268.1~283.9	13.7~19.5
ZSRX-16	2-3/4~4-5/8	70~115	1560	2115	16854	23165	8.5	11.98~14.16	64	245.7~258.3	326.7~344.7	19.5~23
ZSRX-32	3-1/8~6-1/8	80~155	3220	4365	37566	51632	16.1	25.1~30.36	82.5	287.6~313.1	422.5~442.5	23~26

Cylinder

Link

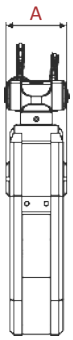

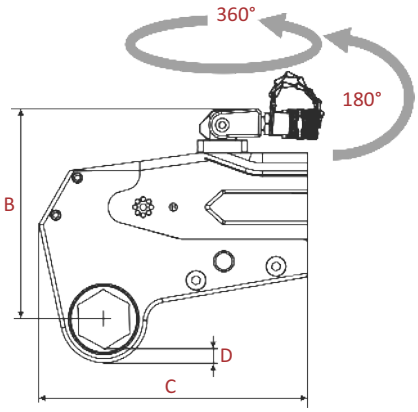

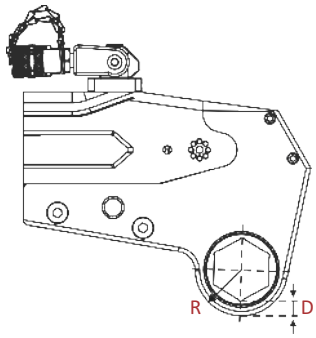

Bolt Dia.	Across flat	Bolt Dia. (Imp.)	Across flat (Imp.)	ZSRX-2			ZSRX-4			ZSRX-8			ZSRX-16			ZSRX-32		
				Link model	R (mm)	D (mm)	Link model	R (mm)	D (mm)	Link model	R (mm)	D (mm)	Link model	R (mm)	D (mm)	Link model	R (mm)	D (mm)
M	mm	inch	inch															
20	30	3/4	1-1/4	ZSRX-2L30	26.6	9.1												
22	32		1-7/16	ZSRX-2L32	26.6	9.1												
24	36	7/8	1-5/8	ZSRX-2L36	33.5	10.4												
27	41	1	1-13/16	ZSRX-2L41	34.4	10.4	ZSRX-4L41	36.8	12.7									
30	46	1-1/8	2	ZSRX-2L46	37.2	10.4	ZSRX-4L46	39.5	12.7									
33	50	1-1/4	2-3/16	ZSRX-2L50	40.6	11.7	ZSRX-4L50	42.3	12.7	ZSRX-8L50	43.3	13.7						
36	55	1-3/8	2-3/8	ZSRX-2L55	43.7	11.7	ZSRX-4L55	45.2	12.7	ZSRX-8L55	45.9	13.7						
39	60	1-1/2	2-9/16	ZSRX-2L60	46.6	11.7	ZSRX-4L60	47.9	12.7	ZSRX-8L60	48.9	13.7						
42	65	1-5/8	2-3/4				ZSRX-4L65	51.7	13.7	ZSRX-8L65	5.5	13.7						
45	70	1-3/4	2-15/16				ZSRX-4L70	54.8	13.7	ZSRX-8L70	54.5	13.7	ZSRX-16L70	60.3	19.5			
48	75	1-7/8	3-1/8				ZSRX-4L75	57.3	13.7	ZSRX-8L75	57.2	13.7	ZSRX-16L75	63.1	19.5			
52	80	2					ZSRX-4L80	60.1	13.7	ZSRX-8L80	59.9	13.7	ZSRX-16L80	66	19.5	ZSRX-32L80	72	25
56	85		3-1/2							ZSRX-8L85	67.2	17.5	ZSRX-16L85	69	19.5	ZSRX-32L85	75	25
60	90	2-1/4								ZSRX-8L90	70.1	18	ZSRX-16L90	71.8	19.5	ZSRX-32L90	78	25
64	95		3-7/8							ZSRX-8L95	73.5	18	ZSRX-16L95	79.3	21	ZSRX-32L95	80.5	25
68	100	2-1/2	4-1/4							ZSRX-8L100	76.4	18	ZSRX-16L100	80	21	ZSRX-32L100	83.5	25
72	105	2-3/4								ZSRX-8L105	80.5	19.5	ZSRX-16L105	82	21	ZSRX-32L105	87.5	26.5
76	110		4-5/8										ZSRX-16L110	85	21	ZSRX-32L110	91.3	26.5
80	115	3											ZSRX-16L115	90	23	ZSRX-32L115	94.9	26.5
	117		5													ZSRX-32L117	94.9	26.5
85	120	3-1/4														ZSRX-32L120	96.5	26.5
	125		5-3/8													ZSRX-32L125	100.5	26.5
90	130	3-1/2														ZSRX-32L130	102.5	26.5
95	135		5-4/3													ZSRX-32L135	108	28.5
	140	3-3/4														ZSRX-32L140	110	28.5
100	145		6-1/8													ZSRX-32L145	113	28.5
105	150	4														ZSRX-32L150	116	28.5
110	155															ZSRX-32L155	119	28.5

Products and specifications subject to change without prior notice

Hydraulic Direct Fit Wrench

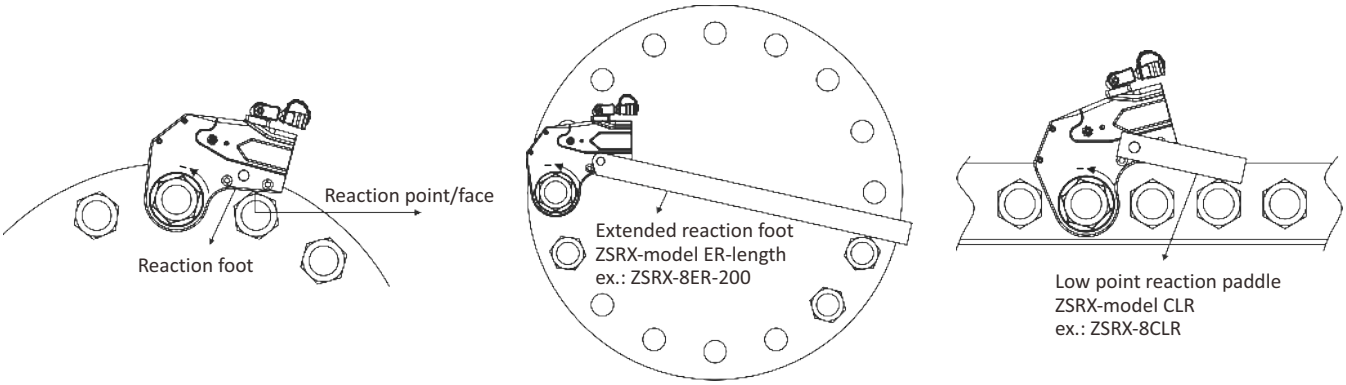

ZSRX Series Torque Conversion Chart											
Work pressure		ZSRX-2				ZSRX-4				ZSRX-8	
		1-1/4" to 1-12/16" 30 to 46mm	1-1/4" to 1-12/16" 30 to 46mm	1-7/8" to 2-3/8" 47 to 60mm	1-7/8" to 2-3/8" 47 to 60mm	1-5/8" to 2-9/16" 41 to 65mm	1-5/8" to 2-9/16" 41 to 65mm	2-3/4" to 3-1/8" 70 to 80mm	2-3/4" to 3-1/8" 70 to 80mm	1-7/8" to 3-1/8" 50 to 80mm	1-7/8" to 3-1/8" 50 to 80mm
psi	bar	lbf.ft	N.m	lbf.ft	N.m	lbf.ft	N.m	lbf.ft	N.m	lbf.ft	N.m
1450	100	284	384	315	428	581	788	685	929	1269	1720
1740	120	340	461	379	513	697	945	822	1115	1523	2064
2031	140	397	538	442	599	813	1103	959	1301	1776	2409
2321	160	454	615	505	684	929	1260	1097	1487	2030	2753
2611	180	510	692	568	770	1046	1418	1234	1673	2284	3097
2901	200	567	769	631	855	1162	1575	1371	1858	2538	3441
3191	220	624	846	694	941	1278	1733	1508	2044	2792	3785
3481	240	680	923	757	1026	1394	1890	1645	2230	3045	4129
3771	260	737	999	820	1112	1510	2048	1782	2416	3299	4473
4061	280	794	1076	883	1198	1626	2205	1919	2602	3553	4817
4351	300	851	1153	946	1283	1742	2363	2056	2788	3807	5161
4641	320	907	1230	1009	1369	1859	2520	2193	2973	4060	5505
4931	340	964	1307	1073	1454	1975	2678	2330	3159	4314	5849
5221	360	1021	1384	1136	1540	2091	2835	2467	3345	4568	6193
5511	380	1077	1461	1199	1625	2207	2993	2604	3531	4822	6537
5802	400	1134	1538	1262	1711	2323	3150	2741	3717	5075	6881
6092	420	1191	1614	1325	1796	2440	3308	2878	3903	5329	7226
6382	440	1247	1691	1388	1882	2556	3465	3015	4088	5583	7570
6672	460	1304	1768	1451	1967	2672	3623	3153	4274	5837	7914
6962	480	1361	1845	1514	2053	2788	3780	3290	4460	6091	8258
7252	500	1418	1922	1577	2138	2904	3938	3427	4646	6344	8602
7542	520	1474	1999	1640	2224	3020	4095	3564	4832	6598	8946
7832	540	1531	2076	1703	2309	3137	4253	3701	5018	6852	9290
8122	560	1588	2153	1766	2395	3253	4410	3838	5203	7106	9634
8412	580	1644	2230	1830	2481	3369	4568	3975	5389	7359	9978
8702	600	1701	2306	1893	2566	3485	4725	4112	5575	7613	10322
8992	620	1758	2383	1956	2652	3601	4883	4249	5761	7867	10666
9282	640	1815	2460	2019	2737	3717	5040	4368	5947	8121	11010
9572	660	1871	2537	2082	2823	3834	5198	4523	6133	8375	11354
9863	680	1928	2614	2145	2908	3950	5355	4660	6319	8628	11698
10153	700	1985	2691	2208	2994	4066	5513	4797	6504	8882	12043

Hydraulic Direct Fit Wrench

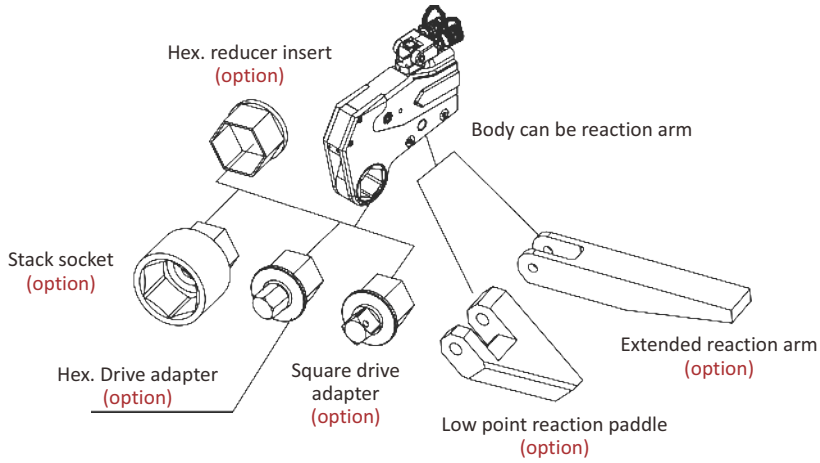

	How to build Torque Wrench drive and socket
	Link model -H Hex. Across size Example: ZSRX-8L95-H85
	Model HH Hex. Drive size - Hex. Socket size Example: ZSRX-8HH75-90
	Model HS Hex. Drive size - Square drive size Example: ZSRX-4HS46-1"
	Model HHM Hex. Drive size - Hex. Drive size Example: ZSRX-4HHM41-27

ZSRX Series Torque Conversion Chart

Work pressure		ZSRX-8		ZSRX-16				ZSRX-32			
		3-3/8" to 4-1/8" 85 to 105mm	3-3/8" to 4-1/8" 85 to 105mm	2-3/4" to 3-15/16" 70 to 100mm	2-3/4" to 3-15/16" 70 to 100mm	4-1/8" to 4-5/8" 105 to 115mm	4-1/8" to 4-5/8" 105 to 115mm	3-1/8" to 4-1/2" 80 to 115mm	3-1/8" to 4-1/2" 80 to 115mm	4-11/16" to 6-1/8" 120 to 155mm	4-11/16" to 6-1/8" 120 to 155mm
psi	bar	lbf.ft	N.m	lbf.ft	N.m	lbf.ft	N.m	lbf.ft	N.m	lbf.ft	N.m
1450	100	1548	2293	2293	3109	2441	3309	4734	6418	5440	7376
1740	120	1858	2519	2752	3731	2929	3971	5681	7702	6528	8851
2031	140	2167	2938	3210	4353	3417	4633	6628	8986	7616	10326
2321	160	2477	3358	3669	4975	3905	5295	7574	10269	8704	11801
2611	180	2787	3778	4128	5596	4394	5957	8521	11553	9792	13277
2901	200	3096	4198	4586	6218	4882	6619	9468	12837	10880	14752
3191	220	3406	4618	5045	6840	5370	7281	10415	14120	11968	16227
3481	240	3715	5037	5504	7462	5858	7943	11361	15404	13057	17702
3771	260	4025	5457	5962	8084	6346	8604	12308	16688	14145	19177
4061	280	4335	5877	6421	8706	6835	9266	13255	17971	15233	20653
4351	300	4644	6297	6879	9327	7323	9928	14202	19255	16321	22128
4641	320	4954	6717	7338	9949	7811	10590	15149	20539	17409	23603
4931	340	5263	7136	7797	10571	8299	11252	16095	21823	18497	25078
5221	360	5573	7556	8255	11193	8787	11914	17042	23106	19585	26553
5511	380	5883	7976	8714	11815	9275	12576	17989	24390	20673	28029
5802	400	6192	8396	9173	12436	9764	13238	18936	25674	21761	29504
6092	420	6502	8815	9631	13058	10252	13900	19883	26957	22849	30979
6382	440	6812	9235	10090	13680	10740	14561	20829	28241	23937	32454
6672	460	7121	9655	10549	14302	11228	15223	21776	29525	25025	33929
6962	480	7431	10075	11007	14924	11716	15885	22723	30808	26113	35404
7252	500	7740	10495	11466	15546	12204	16547	23670	32092	27201	36880
7542	520	8050	10914	11924	16167	12693	17209	24617	33376	28289	38355
7832	540	8360	11334	12383	16789	13181	17871	25563	34659	29377	39830
8122	560	8669	11754	12842	17411	13669	18533	26510	35943	30465	41305
8412	580	8979	12174	13300	18033	14157	19195	27457	37227	31553	42780
8702	600	9288	12593	13759	18655	14645	19856	28404	38510	32641	44256
8992	620	9598	13013	14218	19276	15434	20518	29351	39794	33729	45731
9282	640	9908	13433	14676	19898	15622	21180	30297	41078	34817	47206
9572	660	10217	13853	15135	20520	16110	21842	31244	42361	35905	48681
9863	680	10527	14273	15593	21142	16598	22504	32191	43645	36993	50156
10153	700	10837	14692	16052	21764	17086	23166	33138	44929	38081	51632

Products and specifications subject to change without prior notice

ZSPA-554TQJ

Hydraulic Air Pump

- 2-speed pump drives single -or double-acting cylinders, delivering a high volume of oil .
- Air is the preferred source of power which supply require 3~8bar.
- Max. Pressure: 700bar.
- External adjustable pressure regulator
- Powerful 4 hp motor starts under load.
- Retract side internal relief valve protects tool.
- Just use with Hydraulic lift applications.
- Stainless frame easy to carry.

Optional
G= Pressure Gauge

Typical Set-up
Hook-up for single-acting cylinders.

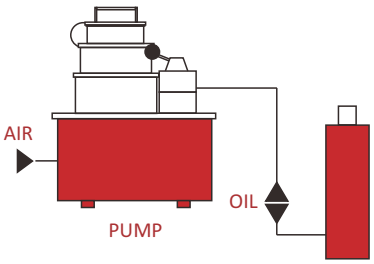

Typical Set-up
Hook-up for double-acting cylinders.

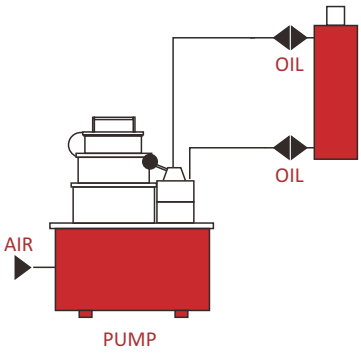

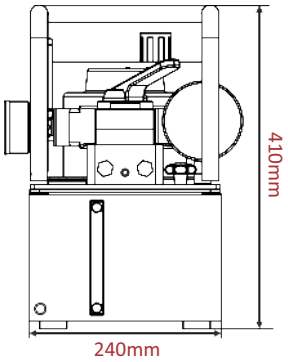

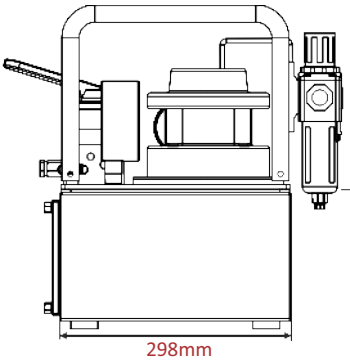

Air units (F.R.L.Unit): filter regulator lubricator

BASIC PUMP VALVE	Used with cylinder		Valve Function		
Manual 3 way Valve	●		●	●	●
Manual 4 way Valve		●	●	●	●

Model Number	Pump Type	dB(A) at Idle and 700bar	Motor	Used with cyl.	Flow rate @115VAC(l/min)				oil tank	Weight with oil
			kW(hp)		0(bar)	50(bar)	350(bar)	700(bar)	L	kg
ZSPA-554TQJ	TWO-Speed	85/90	2.2(4)	Single and Double Acting	12	7.1	2	0.9	8	27.5

Hydraulic Electric Pump

ZSPE-3000 Series

Reservoir Capacity: 3000-6000c.c
Flow at rated pressure: 4-0.4 L
Motor Size: 0.37kW (0.5 hp)
Maximum Operating Pressure: 700 bar

Hydraulic Electric Pump

- Requires less energy, simple and easy to operate.
- Suitable for any industrial application.
- Handle and casing built together.
- Equipped with 10ft remote line.
- Carbon brush motor, working frequently.

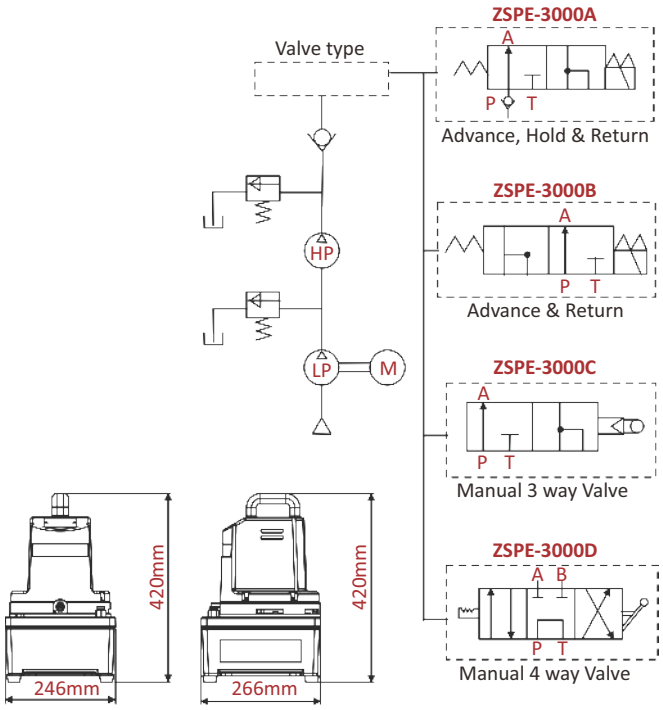

Custom build your Electric Pump

ZSPE-3000 A 1 5 1 LT PBG
1 2 3 4 5 6

1.Valve
- A. 3way/ 2position built-in Solenoid Valve:
  Advance Hold Return
- B. Remote Release Pressure:
  Advance Return
  (Ideal for punching, crimping and cutting)
- C. 3way/ 2position Manual Valve:
  Advance Hold Manual return
- D. 4way/ 3position Manual Valve:
  Advance Hold Manual return

2.Voltage
- 1= 115V/7.5A
- 2= 230V/2.8A

3.Hz
- 5= 50Hz I 60Hz

4.Phase
- 1= 1ph

5.Reservoir
- No word= 3000c.c PU reservoir
- LT= 8000c.c Iron reservoir
- User can order suitable reservoir.

6.fitting
- PJ= Pressure adjust switch
- PB= Pressure adjuster
- G= Pressure gauge

Control Valve

- A single-acting cylinder must be powered by a pump with a 3-way solenoid (built-in) or manual valve.
- Compare Model: ZSPE-3000APS (solenoid) or ZSPE-3000CPS (manual)

- A double-acting cylinder must be powered by a pump with a 4-way valve.
- Compare Model: ZSPE-3000D

LT= Iron reservoir

G= Pressure Gauge

PJ= Pressure Adjust Switch
Part No.: ZSPG-800-CE80

PB= Pressure Adjuster Switch
Part No.: ZSPS-7A-700

Model Number	Motor	Max. Pressure	Pressure Rating		Output flow rate		dB(A) at Idle and 700bar	Weight include oil	Dimension
			1st stage	2nd stage	1st stage	2nd stage			
	kW(hp)	psi(bar)	psi(bar)		L(min)			kg	mm
ZSPE-3000	0.37(0.5)	10000(700)	200(14)	10000(700)	4	0.4	85-90	16	250*270*400
ZSPE-3000LT	0.37(0.5)	10000(700)	200(14)	10000(700)	4	0.4	85-90	24	300*350*460

Products and specifications subject to change without prior notice

Hydraulic Electric Pump

ZHEP-665 Series

Reservoir Capacity: 8-20L
Flow at rated pressure: 11.3-0.9 L
Motor Size: 0.84kW (1-1/8 hp)
Maximum Operating Pressure: 700 bar

Hydraulic Electric Pump

- 2-speed pump drives single -or double-acting cylinders, delivering a high volume of oil .
- Air is the preferred source of power which supply require 3~8bar.
- Max. Pressure: 700bar.
- External adjustable pressure regulator
- Powerful 4 hp motor starts under load.
- Retract side internal relief valve protects tool.
- Just use with Hydraulic lift applications.
- Stainless frame easy to carry.

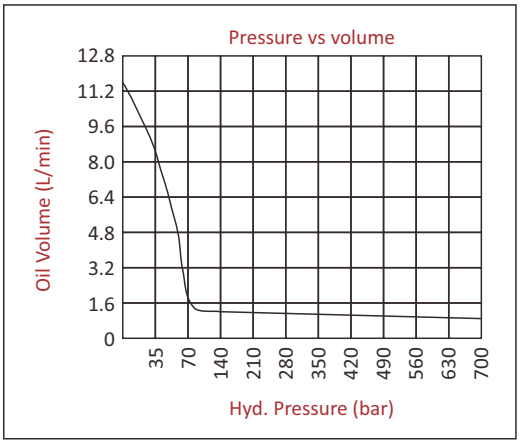

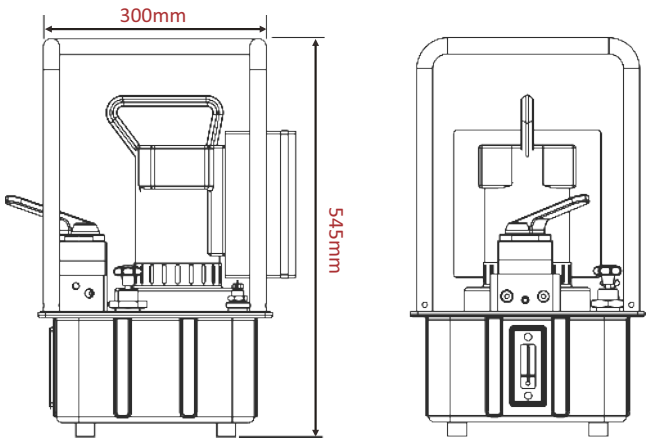

Custom build your Electric Pump

ZHEP-665	TQJ	1	5	1	8	8	WOG
	0	1	2	3	4	4	6

O.Type
- TQ= use with Torque Wrench
- TQH= use with hydraulic lock bolt tools.
- TQJ= use in lift applications

1.Voltage
- 1= 115V
- 2= 230V

2.Hz
- 5= 50Hz I 60Hz

3.Phase
- 1= 1ph

4.Reservoir (Lx0.26= gal)
- 8= 8L(2.1 gal)
- 20= 20L(5.2gal)
- *User can order suitable reservoir.

5.Valve (just use in TQJ series)
- 3= Manual 3Way
- 4= Manual 4Way
- 7= Check Solenoid 3Way
- 8= Check Solenoid 4Way

6.Optional
- W= Castor wheel
- O= Cool system
- G= Pressure Gauge

Model Number	rpm	dB(A) at Idle and 700bar	Motor	Amp at 700bar	Flow rate @230VAC(l/min)				oil tank	Usable oil	Weight with oil
			kW(hp)	A	0(bar)	50(bar)	350(bar)	700(bar)	L	L	kg
ZHEP-665	12000	80	0.84(1-1/8)	20/110V 10.7/230V	11.3	7.2	1.2	0.95	8	7	32

ZSQB

Maximum Operating Pressure: 700 bar

Hydraulic Couplers

- High flow rate and high pressure resistance.
- Dust cap include on all models.

Female Male

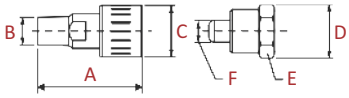

ZSQB-1/4T

Female Male

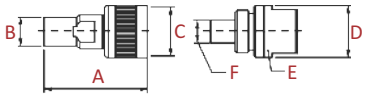

ZSQB-3/8J

Female Male

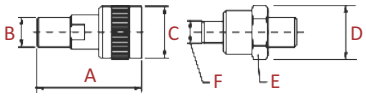

ZSQB-3/8T

Female Male

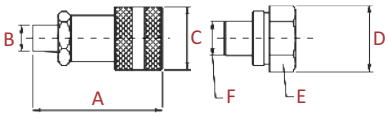

ZSQB-3/8U

Female Male

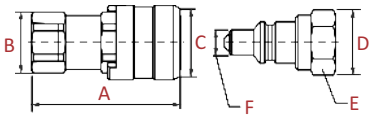

ZSQB-37

Model Number	Female Model	Male Model	Dimension (mm)					
			A	Thread type B	C	D	E	F
ZSQB-1/4T	ZSQB-1/4TF	ZSQB-1/4TM	58.5	1/4"-18NPT	28.6	30	26	Φ10
ZSQB-3/8J	ZSQB-3/8JF	ZSQB-3/8JM	59	3/8"-19PT	30.5	28	24	Φ12.7(1/2")
ZSQB-3/8T	ZSQB-3/8TF	ZSQB-3/8TM	58.5	3/8"-18NPT/PT	38.5	33	28	Φ12
ZSQB-3/8U	ZSQB-3/8UF	ZSQB-3/8UM	72	3/8"-18NPTF/PT	35	37	32	Φ19.05(3/4")
ZSQB-37	ZSQB-372F	ZSQB-372M	64	3/8"-18NPTF/PT	32	28.5	24H	Φ11.25(7/16")

Female Male

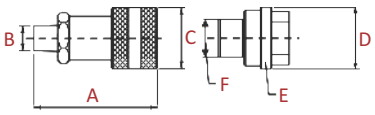

ZSQB-1/4H

Female Male

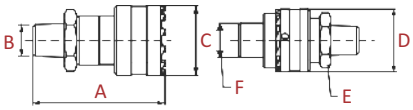

ZSQB-1/4HG

Dust cap

Aluminum Dust cap.

ZSQB-1/4HM-1

ZSQB-1/4HF-1

Model Number	Female Model	Dust Cap Model	Male Model	Dust Cap Model	Dimension (mm)					
					A	Thread type B	C	D	E	F
ZSQB-1/4H	ZSQB-1/4HF	ZSQB-1/4HF-1	ZSQB-1/4HM	ZSQB-1/4HM-1	59.75	1/4"-18NPTF	15.88	24	28	15.88
ZSQB-1/4HG	ZSQB-1/4HGF		ZSQB-1/4HGM		54.85	1/4"-18NPTF	28.2	28.4	22	15.88

Products and specifications subject to change without prior notice

ZXU

High Pressure Hydraulic Hoses

- Tube: Oil resistant synthetic rubber.
- Cover: Oil, abrasion and weather aging resistant synthetic rubber.
- Temp. Range: -40°C~+93°C
- Max. change in length: -4%~+2%(under W.P.)
- Reinforcement: Two layers of steel wire braids.

*Operating temperature in excess of 93°C may materially reduce the service life of hose assembly.

1/4"NPTF(Male)

1/4"NPTF(Female)

3/8"NPTF(Male)

3/8"NPTF(Female)

How is a hydraulic hose model number is built up:

ZXU	2	-	1.6M	3NM	3NM	-	S
	1		2	3	4		5

1.Tube dimension
- 2= 1/4inch(6.4mm)
- 3= 3/8inch(9.5mm)

2.Length
- 1ft=0.3meter
- 1meter=3.3ft

3.Endone
- 3NM= 3/8NPTF(Male)
- 3PM= 3/8PTF(Male)

4.End two
- 3NM= 3/8NPTF(Male)
- 3NF= 3/8NPTF(Female)
- 3PM= 3/8PTF(Male)
- 3PF= 3/8PTF(Female)

5.Spring circle
- S= Spring circle

Model Number	Tube dimension (I.D)	Hose End Assemblies		Length	Work pressure	Broken pressure	Min B.R.	Weight
	inch(mm)	End one	End two	m	bar	bar	mm	kg/m
ZXU2-1.6M3NM3NM-S	1/4(6.4)	3/8"NPTF(Male)	3/8"NPTF(Male)	1.6	700	1400	100	0.4
ZXU2-1.8M3NM3NM-S	1/4(6.4)	3/8"NPTF(Male)	3/8"NPTF(Male)	1.8	700	1400	100	0.4
ZXU2-2M3NM3NM-S	1/4(6.4)	3/8"NPTF(Male)	3/8"NPTF(Male)	2	700	1400	100	0.4
ZXU2-3M3NM3NM-S	1/4(6.4)	3/8"NPTF(Male)	3/8"NPTF(Male)	3	700	1400	100	0.4
ZXU2-4M3NM3NM-S	1/4(6.4)	3/8"NPTF(Male)	3/8"NPTF(Male)	4	700	1400	100	0.4
ZXU2-5M3NM3NM-S	1/4(6.4)	3/8"NPTF(Male)	3/8"NPTF(Male)	5	700	1400	100	0.4
ZXU2-6M3NM3NM-S	1/4(6.4)	3/8"NPTF(Male)	3/8"NPTF(Male)	6	700	1400	100	0.4
ZXU2-1.6M3NM3NF-S	1/4(6.4)	3/8"NPTF(Male)	3/8"NPTF(Female)	1.6	700	1400	100	0.4
ZXU2-2M3NM3NF-S	1/4(6.4)	3/8"NPTF(Male)	3/8"NPTF(Female)	2	700	1400	100	0.4
ZXU2-3M3NM3PF-S	1/4(6.4)	3/8"NPTF(Male)	3/8"PTF(Female)	3	700	1400	100	0.4
ZXU2-1.8M3PM3PM-S	1/4(6.4)	3/8"PTF(Male)	3/8"PTF(Male)	1.8	700	1400	100	0.4
ZXU2-2M3PM3PM-S	1/4(6.4)	3/8"PTF(Male)	3/8"PTF(Male)	2	700	1400	100	0.4
ZXU2-2.5M3PM3PM-S	1/4(6.4)	3/8"PTF(Male)	3/8"PTF(Male)	2.5	700	1400	100	0.4
ZXU2-3M3PM3PM-S	1/4(6.4)	3/8"PTF(Male)	3/8"PTF(Male)	3	700	1400	100	0.4
ZXU2-5.5M3PM3PM-S	1/4(6.4)	3/8"PTF(Male)	3/8"PTF(Male)	5.5	700	1400	100	0.4
ZXU2-6M3PM3PM-S	1/4(6.4)	3/8"PTF(Male)	3/8"PTF(Male)	6	700	1400	100	0.4
ZXU2-1.8M3PM3PF-S	1/4(6.4)	3/8"PTF(Male)	3/8"PTF(Female)	1.8	700	1400	100	0.4
ZXU2-2M3PM3PF-S	1/4(6.4)	3/8"PTF(Male)	3/8"PTF(Female)	2	700	1400	100	0.4
ZXU2-3M3PM3PF-S	1/4(6.4)	3/8"PTF(Male)	3/8"PTF(Female)	3	700	1400	100	0.4
ZXU3-2M3NM3NM-S	3/8(9.5)	3/8"NPTF(Male)	3/8"NPTF(Male)	2	700	1400	100	0.4
ZXU3-3M3NM3NM-S	3/8(9.5)	3/8"NPTF(Male)	3/8"NPTF(Male)	3	700	1400	100	0.4
ZXU3-4M3NM3NM-S	3/8(9.5)	3/8"NPTF(Male)	3/8"NPTF(Male)	4	700	1400	100	0.4
ZXU3-5M3NM3NM-S	3/8(9.5)	3/8"NPTF(Male)	3/8"NPTF(Male)	5	700	1400	100	0.4
ZXU3-6M3NM3NM-S	3/8(9.5)	3/8"NPTF(Male)	3/8"NPTF(Male)	6	700	1260	127	0.67
ZXU3-2M3PM3PF-S	3/8(9.5)	3/8"PTF(Male)	3/8"PTF(Male)	2	700	1260	127	0.67
ZXU3-3M3PM3PM-S	3/8(9.5)	3/8"PTF(Male)	3/8"PTF(Male)	3	700	1260	127	0.67

ZSPE-554

Hydraulic Electric/Torque Wrench Pump

- External adjustable pressure regulator.
- Retract side internal relief valve protects tool.
- ZSPE-554TQ series: just use with Hydraulic Torque Wrench.
- ZSPE-554TQJ series: just use with Hydraulic lift applications.
- Opt eight 1/4" ports (include female and male couplers with dust cap), that can synchronize work for 4 hydraulic wrench.
- It can be set automatic stop moving as motor idle running till 20, 40, 60 seconds and pressure release.
- Safety start: After stopping, need to press another start button to continue.
- Heat Exchanger Kit: Design air cooling to avoid pump overheating and costly repair from long work periods.

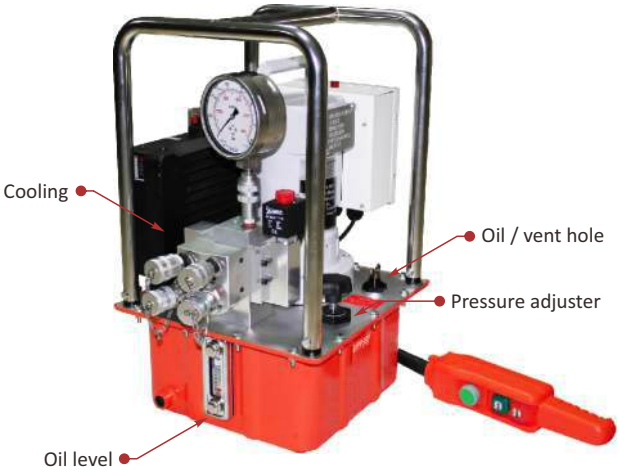

ZSPE-554TQ

Custom build your Electric/Torque Wrench Pump:

ZSPE-554	TQJ	1	5	1	8	2	WOG
	0	1	2	3	4	5	6

O.Type
- TQ= just use in Torque Wrench
- TQJ= using in lift applications

1.Voltage
- 1= 115V
- 2= 230V

2.Hz
- 5= 50Hz I 60Hz

3.Phase
- 1= single phase

4.Reservoir (Lx0.26= gal)
- 8= 8L(2.1 gal)
- 20= 20L(5.2gal)
- *User can order suitable reservoir.

5.Manifold (include 1/4" male-female coupler)
- 1= 1 manifold with 1 male and 1 female coupler
- 2= 1 manifold with 2 male and 2 female couplers (standard)
- 3= 1 manifold with 3 male and 3 female couplers
- 4= 1 manifold with 4 male and 4 female couplers

6.Optional
- W= Wheel
- O= Cool system
- G= Pressure Gauge

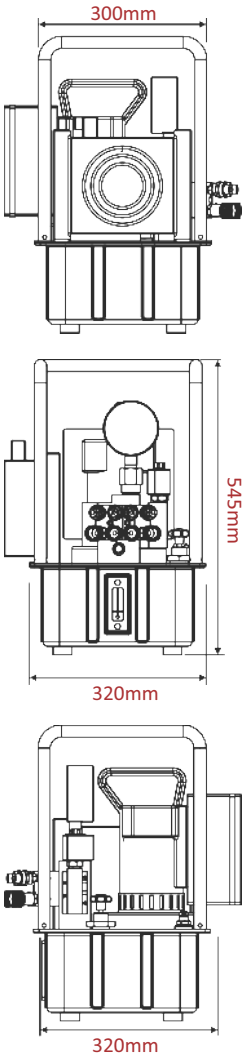

Model Number	rpm	dB(A) at Idle and 700bar	Motor	Amp at 700bar	Flow rate @115VAC(l/min)				oil tank	Usable oil	Weight with oil
			kW(hp)	A	0(bar)	50(bar)	350(bar)	700(bar)	L	L	kg
ZSPE-554	12000	80	0.84(1-1/8)	20/110V 13/230V	11.3	7.1	1.2	0.9	8	7	32

Products and specifications subject to change without prior notice

ZSPA-554

Hydraulic Air/Torque Wrench Pump

- Powerful 4 hp motor starts under load.
- Use where air is the preferred source of power.
- Max. Pressure: 700bar
- Two speed high performance pump.
- External adjustable pressure regulator.
- Retract side internal relief valve protects tool.
- Opt eight 1/4" ports (include female and male couplers with dust cap), that can synchronize work for 4 hydraulic wrench.
- Use for Hydraulic torque Wrench.
- Pneumatic remote control with 5M cord.

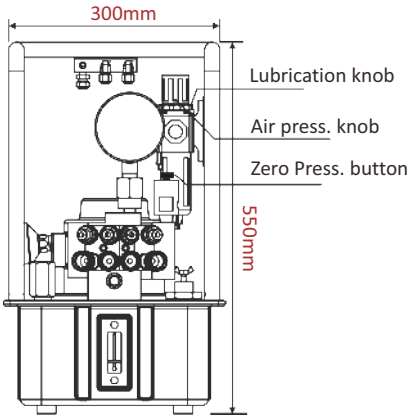

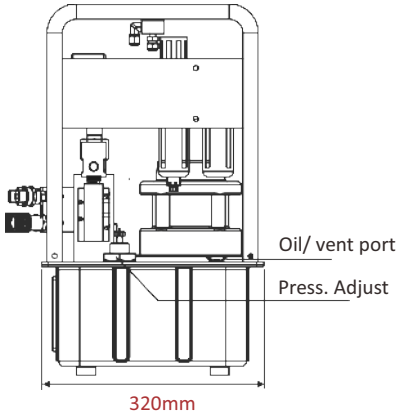

Optional
G= Pressure Gauge

ZSPA554TQ-A-A1
Pneumatic remote

Model Number	Air Supply Req'd	rpm	dB(A) at Idle and 700bar	Motor	Flow rate (l/min)				oil tank	Weight with oil
				hp	0(bar)	70(bar)	350(bar)	700(bar)	L	kg
ZSPE-554	1.4M³/min @6 bar	3000	75	4	7.4	1.3	1.1	0.9	8	38.5

Torque Wrench Hoses:

Use ZIPP ZXU22W series torque wrench hoses with every model torque wrench to ensure the integrity of your hydraulic system.

Model Number	Tube Dia.	Length		Hose End		W.P	B.P
	inch	ft	m	inch		bar	bar
ZXU22W-6M2NM2NM	1/4	20	6	1/4	1/4	700	2800
ZXU22W-12M2NM2NM	1/4	40	12	1/4	1/4	700	2800

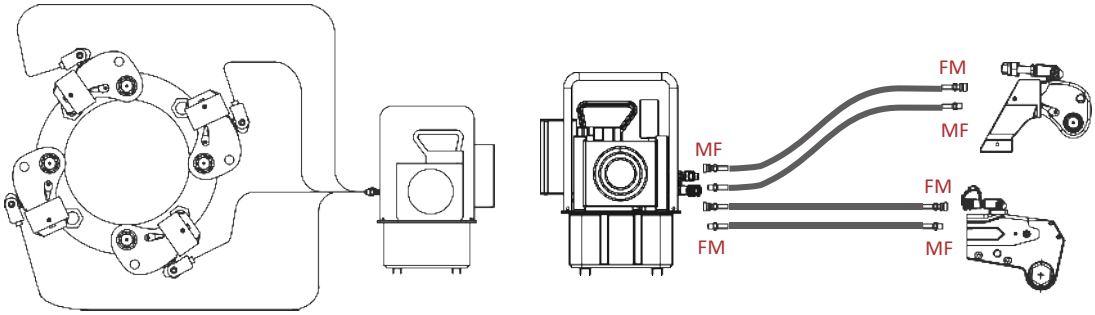

Basic System Set-up

A. 1 Hydraulic Torque Wrench using Electric Pump +1 Square Drive Wrench +Socket +2 hoses

B. 1 Hydraulic Torque Wrench using Electric Pump +1 Low Profile Wrench +2 hoses

C. 1 Hydraulic Torque Wrench using Electric Pump +1~4 Square Drive Wrench (+Socket) or 1~4 Low Profile Wrench +2~8 hoses

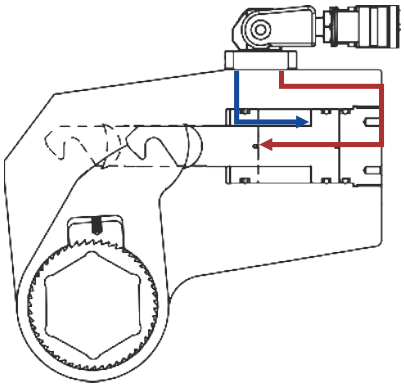

Oil Path

Advance

Return

Wrench Torque Formula

T= F x r

Torque= Force x Lever Arm Length

Ex.: 1000kN x 60mm= 60000 N.m

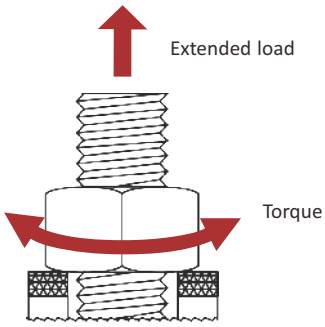

Bolt Load- Torque Formula

T= K x D x N

T: Torque

K: Friction Factor

D: Bolt O.D

N: Bolt extended Load= Stress area x Yield strength x Percent of Yield

Ex.: M16

$$N = \frac{0.7854 \times (16-0.9382 \times 2)^2}{\text{Stress area } mm^2} \times \frac{896}{\text{Yield strength } N/mm^2} \times \frac{80\%}{\text{Percent of Yield}} /1000 = 112N$$

$$T = \frac{0.14}{\text{Friction Factor}} \times \frac{16}{\text{Bolt O.D mm}} \times \frac{112N}{\text{Bolt Load}} = 252N.m$$

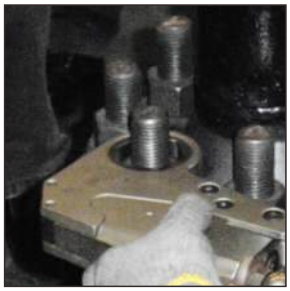

Products and specifications subject to change without prior notice

Hydraulic Air Pump for Torque Wrench

Bolt grade	Tension strength	Yield strength (90%)	μ= 0.10: Low friction application μ= 0.15: Normal friction application μ= 0.20: High friction application	Tightening monent														
	RM(N/mm²)	Rp0.2(N/mm²)		N.m														
6.8	600	480	μ= 0.1	110	160	220	300	390	570	770	1050	1350	1740	2160	2690	3250	4180	5190
			μ= 0.15	150	200	290	400	500	740	1000	1370	1760	2280	2820	3530	4250	5490	6800
			μ= 0.2	170	240	340	460	590	870	1180	1610	2060	2690	3320	4160	5000	6470	8020
8.8	800	640	μ= 0.1	150	210	300	410	520	760	1030	1400	1790	2320	2880	3590	4330	5570	6920
			μ= 0.15	200	270	390	530	670	990	1340	1820	2340	3040	3760	4170	5660	7320	9070
			μ= 0.2	230	320	450	630	780	1160	1570	2140	2750	3580	4430	5550	6670	8630	10700
B.7 (≤2-1/2")	min. 860	min. 720	μ= 0.1	180	250	350	470	600	880	1190	1610	2080	2690	3330	4150	5010	6440	8000
			μ= 0.15	230	320	450	610	770	1140	1550	2100	2700	3520	4350	5450	6550	8450	10490
			μ= 0.2	270	370	530	720	910	1340	1820	2480	3180	4140	5120	6420	7710	9980	12370
10.9	1000	900	μ= 0.1	220	310	440	600	760	1110	1510	2050	2640	3410	4230	5280	6360	8180	10160
			μ= 0.15	290	400	570	780	980	1450	1970	2680	3430	4460	5530	6920	8320	10740	13330
			μ= 0.2	340	470	670	920	1150	1710	2310	3150	4040	5260	6500	8150	9790	12670	15710
12.9	1200	1080	μ= 0.1	260	370	510	700	890	1300	1770	2400	3080	3990	4950	6170	7440	9570	11890
			μ= 0.15	340	470	670	920	1150	1700	2300	3130	4020	5220	6470	8090	9740	12570	15590
			μ= 0.2	400	550	780	1080	1340	2000	2700	3680	4720	6150	7610	9540	11460	14830	18380
			M	16	18	20	22	24	27	30	33	36	39	42	45	48	52	56

Bolt grade	Tension strength	Yield strength (90%)	μ= 0.10: Low friction application μ= 0.15: Normal friction application μ= 0.20: High friction application	Tightening monent														
	RM(N/mm²)	Rp0.2(N/mm²)		N.m														
6.8	600	480	μ= 0.1	6440	7320	8520	9920	10170	10460	11720	13250	14690	16540	19650	20900	23780	25570	
			μ= 0.15	8480	9620	11230	13100	13470	13880	15580	17660	19620	22130	26360	28080	31980	34430	
			μ= 0.2	10010	11350	13270	15510	15960	16460	18510	21000	23350	26370	31450	33530	38210	41160	
8.8	800	640	μ= 0.1	8590	9760	11360	13220	13560	13950	15620	17670	19590	22060	26200				
			μ= 0.15	11300	12830	14970	17470	17960	18510	20780	23550	26160	29510	35150				
			μ= 0.2	13350	15140	17690	20680	21280	21950	24670	28000	31140	35150	41930				
B.7 (≤2-1/2")	min. 860	min. 720	μ= 0.1	9930	11280	13130	15290	15680	16130	18060	20430	22650	25510					
			μ= 0.15	13060	14830	17310	20200	20770	21400	24020	27250	30250	34120					
			μ= 0.2	15430	17500	20460	23910	24610	25380	28530	32380	36000	40650					
10.9	1000	900	μ= 0.1	12610	14330	16680	19420	19920										
			μ= 0.15	16600	18840	21990	25660	26380										
			μ= 0.2	19600	22240	25990	30370	31260										
12.9	1200	1080	μ= 0.1	14760	16770	19520												
			μ= 0.15	19430	22050	25730												
			μ= 0.2	22940	26020	30410												
			M	60	64	68	72	76	80	85	90	95	100	110	115	120	125	

Nominal thread size [mm]

The data above is based on bolts lubricated to manufacturer's specifications.

Due to a variation in friction, we recommend in extreme cases to check with the bolt manufacturer, as this chart represents a guideline only.

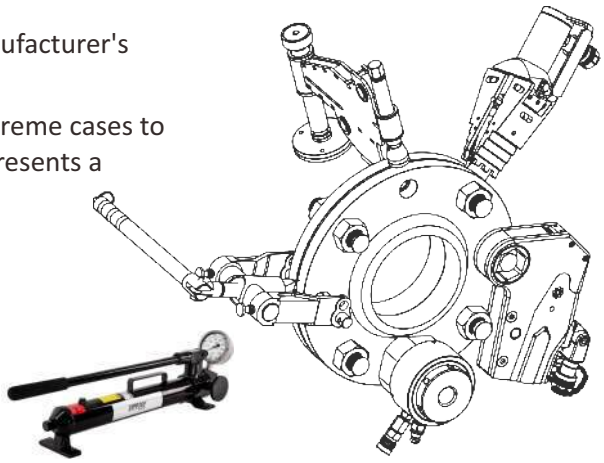

Full Aluminum Housing Series

Easy adjustable Head & Nut designed for obtaining the most effective stroke and riveting speed.

Aluminum alloy forged Hydraulic Section for greater strength and durability.

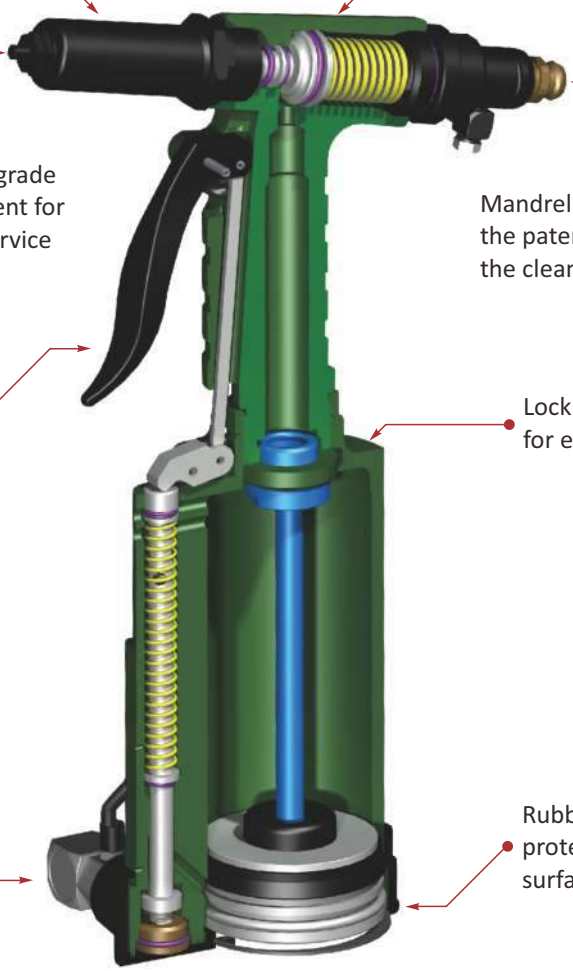

2 piece ultra Jaw made from high grade tool steel and special heat treatment for increasing jaw life and reducing service costs.

Mandrel Collection Bottle equipped with the patented vacuum collecting system for the cleanliness and safety of work area.

Ergonomically designed Trigger enhances comfort and lower operator's fatigue.

Lock Nut designed for easy tool service.

Side mounted Swivel Air Inlet Joint for the tool maneuverability.

Rubber Boot designed for well protection of the tool and work surface.

Applications

- Wherever the fastening methods like: welding, sheet metal screw, bolt, nut, washer, tubular, semi-tubular and solid rivets and adhesives are applied, can be substituted by blind rivets.
- All models above are good for setting standard blind rivets and structural blind rivets.

Patent pending in other countries

R.O.C.PAT.:
092648

P.R.C.PAT.:
ZL 94 2 22569.4

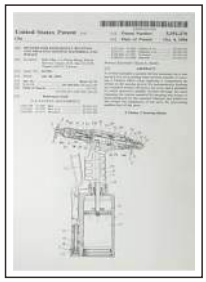

U.S.A.PAT.NO.:
6,149,356

Air Hydraulic Blind Rivet Installation Tool

ZT0318VS
5/32" Air Hydraulic Riveter
(Vacuum type)
Max. 4.0mm blind rivet in Alum./Steel

ZT0618VS
3/16" Air Hydraulic Riveter
(Vacuum type)
Max. 4.8mm blind rivet in Steel/Steel

ZT0918VS
3/16" Air Hydraulic Riveter
(Vacuum type)
Max. 4.8mm blind rivets in all materials

ZT1214VS-5
3/16" Air Hydraulic Riveter
(Vacuum type)
Max. 4.8mm blind rivets in all materials

ZT1214VS-6
1/4" Air Hydraulic Riveter
(Vacuum type)
Max. 6.4mm blind rivet in Steel/Steel

ZT1819VS
1/4" Air Hydraulic Riveter
(Vacuum type)
Max. 6.4mm blind rivets in all materials

Accessories

- Riveter X 1
- Small Wrench X 1
- Large Wrench X 1
- Collection Bottle X 1

DO NOT apply air pressure over 110 psi / 7.5 bar to these tools.

Model	Traction Power lbf(kgf)	Stroke Length inch(mm)	Net Weight lbs(kgs)	Operating Air Pressure psi(bar)	Min. Hose Size inch(mm)	Air Inlet Size inch-NPT/PT	Nosepieces Equipped inch(mm)
ZT0318VS	770(350)	11/16(18)	2.86(1.3)	90(6.2)	3/8(10)	1/4	3/32(2.4)1/8(3.2)5/32(4.0)
ZT0618VS	1320(596)	11/16(18)	3.41(1.55)	90(6.2)	3/8(10)	1/4	3/32(2.4)1/8(3.2)5/32(4.0)3/16(4.8)
ZT0918VS	1983(900)	11/16(18)	4.07(1.85)	90(6.2)	3/8(10)	1/4	3/32(2.4)1/8(3.2)5/32(4.0)3/16(4.8)
ZT1214VS-5	2640(1200)	9/16(14)	4.27(1.94)	90(6.2)	3/8(10)	1/4	5/32(4.0)3/16(4.8)
ZT1214VS-6	2640(1200)	9/16(14)	4.27(1.94)	90(6.2)	3/8(10)	1/4	3/16(4.8)1/4(6.4)
ZT1819VS	3960(1800)	3/4(19)	5.27(2.6)	90(6.2)	3/8(10)	1/4	3/16(4.8)1/4(6.4)

Air Hydraulic Blind Rivet Installation Tool

ZT0618T

ZT0918T

ZT1214T

ZT1819T

ZT0918L

ZT1214L

ZT1819L

ZT0918LV

ZT1214LV

ZT1819LV

DO NOT apply air pressure over 110 psi / 7.5 bar to these tools.

*T: Trigger Type, No-Vacuum. *L: Lever Type, No-Vacuum. *LV: Lever Type, With Vacuum

*Please refer to the blind rivet specification to ensure the tensile strength is lower than the traction power of the model you select.

Model	Traction Power lbf(kgf)	Stroke Length inch(mm)	Net Weight lbs(kgs)	Nosepieces Equipped inch(mm)	Max. Capacity
ZT0618T	1320(596)	11/16(18)	3.30(1.50)	3/32(2.4)1/8(3.2) 5/32(4.0)3/16(4.8)	Max. 3/16"(4.8mm) blind rivets in steel/steel
ZT0918T	1983(900)	11/16(18)	3.96(1.80)	3/32(2.4)1/8(3.2) 5/32(4.0)3/16(4.8)	Max. 3/16"(4.8mm) standard & structural blind rivets in all materials
ZT1214T	2460(1200)	9/16(14)	4.16(1.89)	5/32(4.0)3/16(4.8) 1/4(6.4)	Max. 1/4"(6.4mm) blind rivets in steel/steel
ZT1819T	3960(1800)	3/4(19)	5.61(2.55)	3/16(4.8)1/4(6.4)	Max. 1/4"(6.4mm) standard & structural blind rivets in all materials
ZT0918L ZT0918LV	1983(900)	11/16(18)	3.96(1.80) 4.07(1.85)	3/32(2.4)1/8(3.2) 5/32(4.0)3/16(4.8)	Max. 3/16"(4.8mm) standard & structural blind rivets in all materials
ZT1214L ZT1214LV	2460(1200)	9/16(14)	4.16(1.89) 4.27(1.94)	5/32(4.0)3/16(4.8) 1/4(6.4)	Max. 1/4"(6.4mm) blind rivets in steel/steel
ZT1819L ZT1819LV	3960(1800)	3/4(19)	5.60(2.55) 5.72(2.60)	3/16(4.8)1/4(6.4)	Max. 1/4"(6.4mm) standard & structural blind rivets in all materials

- Operating Air Pressure: 90PSI/6.2bar
- Air Inlet Size: 1/4 inch-NPT/PT
- Min. Hose Size: 3/8"(10mm)

Products and specifications subject to change without prior notice

Air Hydraulic Blind Rivet Installation Tool

Features

- Module unit mechanism enables more common parts to be used in similar designed tools.
- Designed with patented "Module units assembled in composite clam shell housing" for operator's comfort and ease of service.
- Ergonomic texture coated composite housing for operator's comfort.
- Build-in exhaust muffler to minimize the tool noise efficiently.
- Rocker type trigger for ease of operational control.
- Perfect tool for automotive & general industries.
- Optional Jaw Pusher & Nose Pieces for small size rivets.

Patented Vacuum Mandrel Collection System holds the rivets in the Nosepiece regardless of tool position also assure perfect shock absorption.

Aluminum alloy forged and heat treated Hydraulic Section for greater strength and durability.

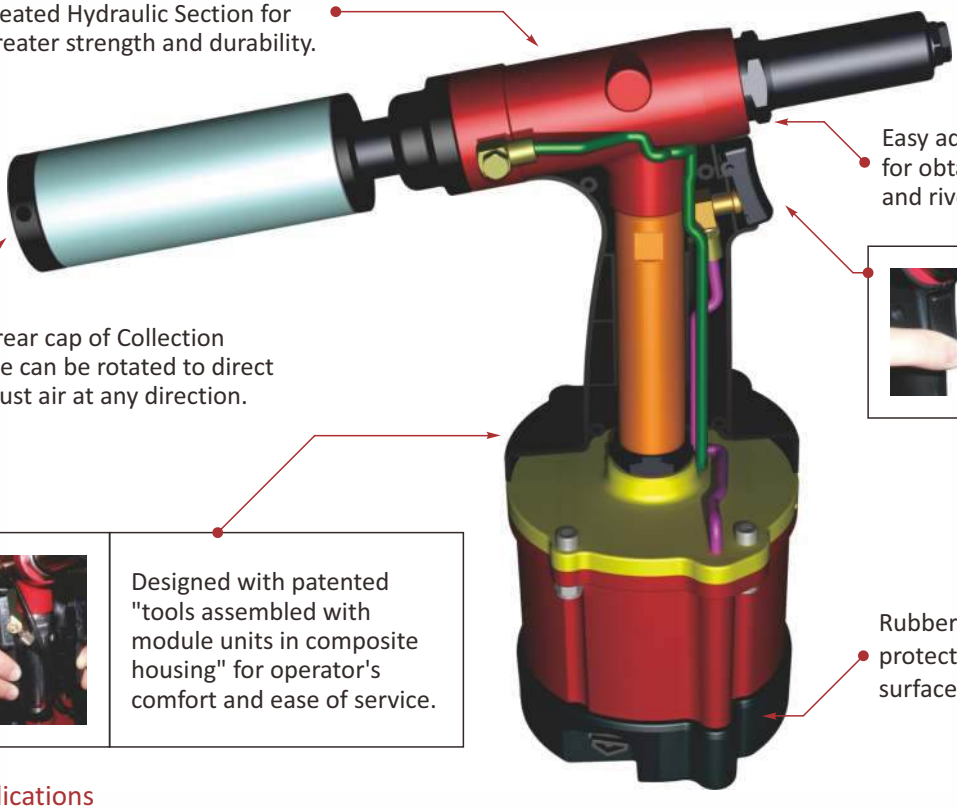

Easy adjustable Head & Nut designed for obtaining the most effective stroke and riveting speed.

Rocker type Trigger, ideal for long time work.

The rear cap of Collection Bottle can be rotated to direct exhaust air at any direction.

Designed with patented "tools assembled with module units in composite housing" for operator's comfort and ease of service.

Rubber Boot designed for well protection of the tool and work surface.

Applications

- Wherever the fastening methods like: welding, sheet metal screw, bolt, nut, washer, tubular, semi-tubular and solid rivets and adhesives are applied, can be substituted by blind rivets.
- All models above are good for setting standard blind rivets and structural blind rivets.

Patent pending in other countries

R.O.C.PAT.:
092648

P.R.C.PAT.:
ZL 94 2 22569.4

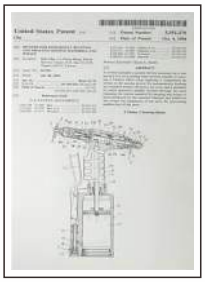

U.S.A.PAT.NO.:
6,149,356

DEUTSCHLAND PAT.:
Nr.20 2007 007 127.2

ZT1017VSN-5

3/16" Air Hydraulic Riveter
(Vacuum type)
Max. 4.8mm blind rivets in all materials

Accessories

- Riveter X 1
- Small Wrench X 1
- Large Wrench X 1
- Collection Bottle X 1

Optional
- P/N 1017VSN-1
  1/4"(6.4mm) Pulling Kit
- P/N 1017VSN-2
  3/32" & 1/8"(2.4mm & 3.2mm) Pulling Kit

ZT1017VSN-6

1/4" Air Hydraulic Riveter
(Vacuum type)
Max. 6.4mm blind rivets in Alum./Steel

Accessories

- Riveter X 1
- Small Wrench X 1
- Large Wrench X 1
- Collection Bottle X 1

Optional
- P/N 1017VSN-2
  3/32" & 1/8"(2.4mm & 3.2mm) Pulling Kit
- P/N 1017VSN-3
  5/32" & 3/16"(4.0mm & 4.8mm) Pulling Kit

DO NOT apply air pressure over 110 psi / 7.5 bar to these tools.

*Please refer to the blind rivet specification to ensure the tensile strength is lower than the traction power of the model you select.

Model	Traction Power lbf(kgf)	Stroke Length inch(mm)	Net Weight lbs(kgs)	Operating Air Pressure psi(bar)	Min. Hose Size inch(mm)	Air Inlet Size inch-NPT/PT	Nosepieces Equipped inch(mm)
ZT1017VSN-5	2248(1022)	43/64(17)	4.3(1.95)	90(6.2)	3/8(10)	1/4	5/32(4.0) 3/16(4.8)
ZT1017VSN-6	2248(1022)	43/64(17)	4.3(1.95)	90(6.2)	3/8(10)	1/4	1/4(6.4)

Products and specifications subject to change without prior notice

Full Composite Housing Series

Features

- Built with patented "Module units assembled in composite clam shell housing" for the ease of tool service.
- Patented "Broken mandrel vacuum collection system" for the cleanliness and safety of work area.
- Forged and heat treated aluminum alloy made Hydraulic Section for the best rigidity.
- Stainless steel made Air Cylinder for the best rigidity and durability of the tool.
- Easy adjustable Head & Nut designed for obtaining the most effective stroke.
- Ergonomic texture coated composite housing for operator's comfort.
- Equipped with safety valve to avoid damage due to over pressure.
- Swivel air inlet design for maneuverability of works.
- The lightest model among compatible designs.

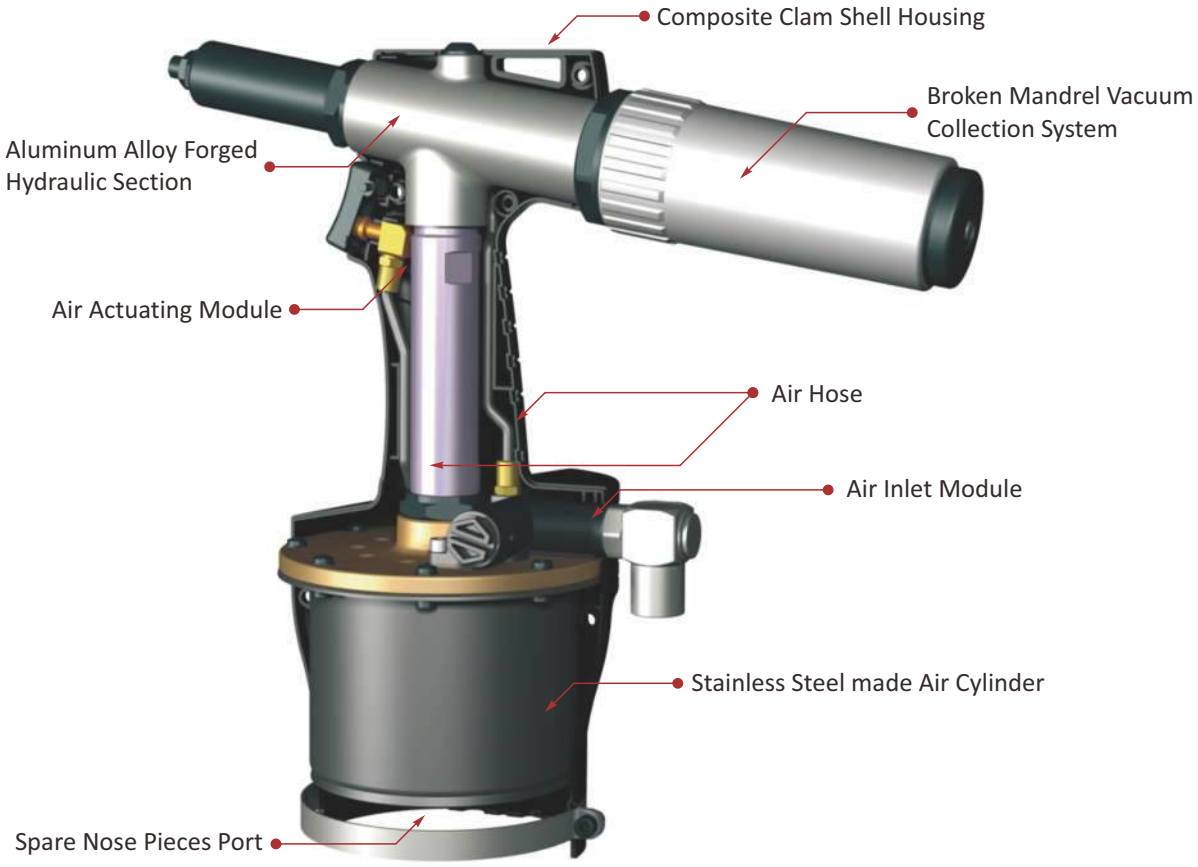

Patent pending in other countries

R.O.C.PAT.:
092648

P.R.C.PAT.:
ZL 94 2 22569.4

DEUTSCHLAND PAT.:
Nr.20 2007 007 127.2

Full Composite Housing Series

ZT0919VS

3/16" Composite Air Hydraulic Riveter

Max. 4.8mm standard & structural blind rivets in all materials

ZT1821VS

1/4" Composite Air Hydraulic Riveter

Max. 6.4mm standard & structural blind rivets in all materials

DO NOT apply air pressure over 110 psi / 7.5 bar to these tools.

*Please refer to the blind rivet specification to ensure the tensile strength is lower than the traction power of the model you select.

Model	Traction Power lbf(kgf)	Stroke Length inch(mm)	Net Weight lbs(kgs)	Operating Air Pressure psi(bar)	Min. Hose Size inch(mm)	Air Inlet Size inch-NPT/PT	Nosepieces Equipped inch(mm)
ZT0919VS	1980(900)	3/4(19)	3.3(1.5)	90(6.2)	3/8(10)	1/4	3/32(2.4)1/8(3.2) 5/32(4.0)3/16(4.8)
ZT1821VS	4013(1800)	13/16(21)	5.1(2.3)	90(6.2)	3/8(10)	1/4	3/16(4.8)1/4(6.4)

Products and specifications subject to change without prior notice

Air Hydraulic Blind Rivet Installation Tool

Features

- Features with the most advanced patented digital module to enable operators know the rivet tool setting capacity instantly under various air supply condition and the rivet setting cycles performed during their working period.
- It will also remind operators when to do service or maintenance to the tool in proper interval.
- It will help to cease the controversy about warranty issue especially if the tool has been misused or abused with abnormal high air pressure which exceeds the design specification.
- Built with patented "Module units assembled in composite clam shell housing" for the ease of tool service.
- Patented "Broken mandrel vacuum collection system" for the cleanliness and safety of work area.
- Forged and heat treated aluminum alloy made Hydraulic Section for the best rigidity.
- Easy adjustable Head & Nut designed for obtaining the most effective stroke.
- Ergonomic texture coated composite housing for operator's comfort.
- Swivel air inlet design for maneuverability works.

Opt. (D) type Digital Module

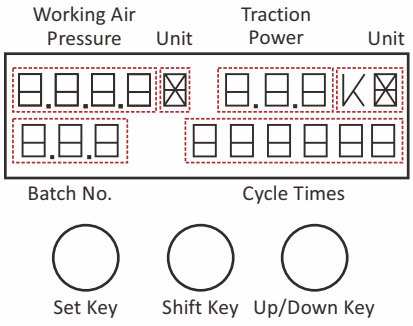

Patent pending in other countries

R.O.C.PAT.:
355976

R.O.C.PAT.:
092648

P.R.C.PAT.:
ZL 94 2 22569.4

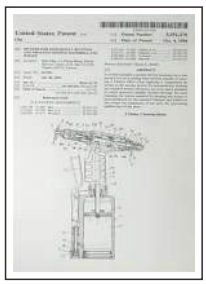

U.S.A.PAT.NO.:
6,149,356

DEUTSCHLAND PAT.:
Nr.20 2007 007 127.2

Air Hydraulic Blind Rivet Installation Tool

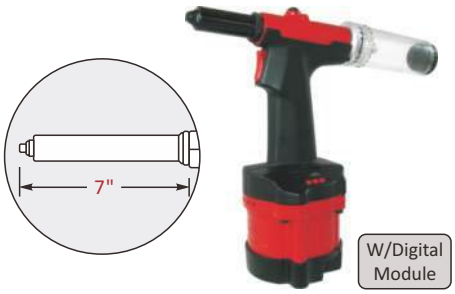

ZT0520 (L) / ZT0520D (L)
5/32" Air Hydraulic Riveter
ZT0715 (L) / ZT0715D (L)
3/16" Air Hydraulic Riveter
(L) - 7inch extended front head

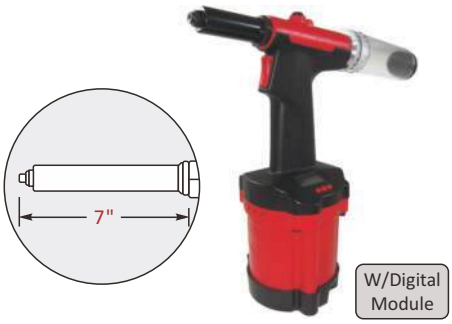

ZT0922 (L) / ZT0922D (L)
3/16" Air Hydraulic Riveter
ZT1218 (L) / ZT1218D (L)
1/4" Air Hydraulic Riveter
(L) - 7inch extended front head

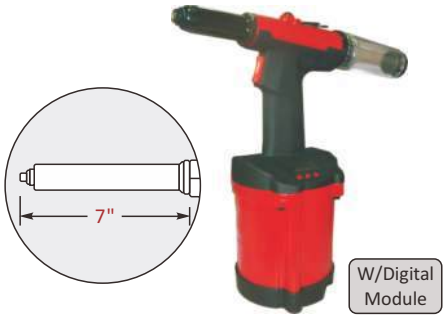

ZT1528 (L) / ZT1528D (L)
ZT1725 (L) / ZT1725D (L)
1/4" Air Hydraulic Riveter
(L) - 7inch extended front head

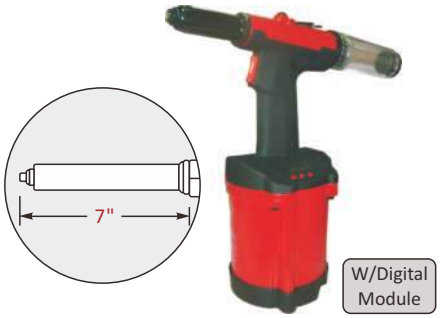

ZT2021 (L) / ZT2021D (L)
ZT2318 (L) / ZT2318D (L)
1/4" Air Hydraulic Riveter
(L) - 7inch extended front head

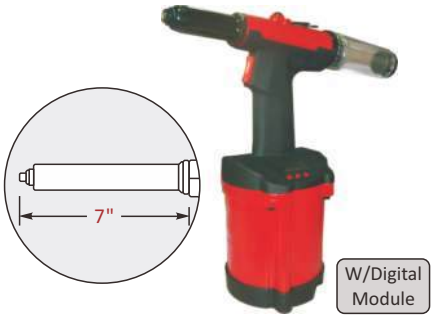

ZT2021-8 (L) / ZT2021D-8 (L)
ZT2318-8 (L) / ZT2318D-8 (L)
5/16" Air Hydraulic Riveter
(L) - 7inch extended front head

DO NOT apply air pressure over 110 psi / 7.5 bar to these tools.

*Please refer to the blind rivet specification to ensure the tensile strength is lower than the traction power of the model you select.

Model	Traction Power lbf(kgf)	Stroke Length inch(mm)	Net Weight lbs(kgs)	Nosepieces Equipped inch(mm)	Max. Capacity
ZT0520 ZT0520D	1100(500)	51/64(20)	3.8(1.7)	3/32(2.4)1/8(3.2) 5/32(4.0)	Max. 5/32"(4.0mm) structural rivets in all materials
ZT0715 ZT0715D	1500(700)	19/32(15)	3.8(1.7)	3/32(2.4)1/8(3.2) 5/32(4.0)3/16(4.8)	Max. 3/16"(4.8mm) blind rivets in steel/steel
ZT0922 ZT0922D	2000(920)	7/8(22)	4.2(1.9)	5/32(4.0)3/16(4.8) Monobolt 3/16(4.8)	Max. 3/16"(4.8mm) structural rivets in all materials
ZT1218 ZT1218D	2523(1150)	23/32(18)	4.2(1.9)	5/32(4.0)3/16(4.8) 1/4(6.4)	Max. 1/4"(6.4mm) blind rivets in steel/steel
ZT1528 ZT1528D	3300(1500)	1-1/8(28)	5.6(2.5)	3/16(4.8)1/4(6.4) Monobolt 3/16(4.8)1/4(6.4)	Max. 1/4"(6.4mm) structural rivets in all materials
ZT1725 ZT1725D	3700(1700)	63/64(25)	5.6(2.5)	3/16(4.8)1/4(6.4) Monobolt 3/16(4.8)1/4(6.4)	Max. 1/4"(6.4mm) structural rivets in all materials
ZT2021 ZT2021D	4400(2000)	53/64(21)	5.6(2.5)	3/16(4.8)1/4(6.4) Monobolt 3/16(4.8)1/4(6.4)	Max. 1/4"(6.4mm) structural rivets in all materials
ZT2021-8 ZT2021D-8	4400(2000)	53/64(21)	5.6(2.5)	5/16(7.8)	Max. 5/16"(7.8mm) blind rivets in steel/steel
ZT2318 ZT2318D	5000(2300)	23/32(18)	5.6(2.5)	3/16(4.8)1/4(6.4) Monobolt 3/16(4.8)1/4(6.4)	Max. 1/4"(6.4mm) structural rivets in all materials
ZT2318-8 ZT2318D-8	5000(2300)	23/32(18)	5.6(2.5)	5/16(7.8)	Max. 5/16"(7.8mm) structural rivets in all materials

- Operating Air Pressure: 90PSI/6.2bar
- Air Inlet Size: 1/4 inch-NPT/PT
- Min. Hose Size: 3/8"(10mm)

Products and specifications subject to change without prior notice

Blind Rivet Installation Tool

Features

- Sets 3/32" to 3/16" rivets with up to 1983 lbs. of pulling capacity
- Tougher and durable
- Easy operation
- Aluminum housing, strong & light weight.
- Simply structure, easy to service.
- Power by air only, no need refill hydraulic oil.
- Quick cycle times, 2.0 seconds on average.

ZAR0921
3/16" Air Riveter
ZAR0921V
3/16" Air Riveter-Vacuum

ZAR0818
3/16" Air Riveter
ZAR0818V
3/16" Air Riveter-Vacuum

Model	Traction Power lbf(kgf)	Stroke Length inch(mm)	Net Weight lbs(kgs)	Operating Air Pressure psi	Avg. Air Cons. cu.ft/stroke	Noise Level db(A)	Vibration m/s²	Nosepieces Equipped inch(mm)
ZAR0921 ZAR0921V	1896(860)	3/4(19)	3.1(1.4)	60~90	0.03	79	<2.5	3/32(2.4)1/8(3.2) 5/32(4.0)3/16(4.8)
ZAR0818 ZAR0818V	1763(800)	23/32(18)	3.3(1.5)	60~110	–	81	<2.5	3/32(2.4)1/8(3.2) 5/32(4.0)3/16(4.8)

- Air Inlet Size: 1/4 inch-NPT/PT
- Min. Hose Size: 3/8"(10mm)

Features

- Ergonomic in-line design.
- Vacuum mandrel collection system.
- Designed for assembly line with balancer approach.

ZIR0922
1/4" Air Hydraulic
In-Line Riveter-Vacuum

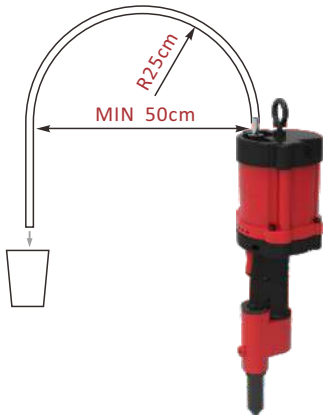

suggest setting distance: 50cm so that the broken longer mandrel can get through fall to the collecting pot.

Model	Traction Power lbf(kgf)	Stroke Length inch(mm)	Net Weight lbs(kgs)	Nosepieces Equipped inch(mm)	Max. Capacity
ZIR0922	2000(920)	7/8(22)	4.2(1.9)	3/16(4.8), 5/32(4.0) 1/4"(6.4mm), Monobolt 3/16(4.8)	Max. 1/4"(6.4mm) Alum./Steel blind rivets

- Operating Air Pressure: 90PSI/6.2bar
- Air Inlet Size: 1/4 inch-NPT/PT
- Min. Hose Size: 3/8"(10mm)

Air Hydraulic Blind Rivet Installation Tool

Features

- Stronger Traction Power.
- Good Balance To Minimum Operator Fatigue.
- Trigger Is Comfortable Operation At Any Direction.
- Screw Plug Is Easy For Refilling Oil.
- Forged Aluminum Alloy For Strong Hydraulic Section.

ZT0616
5/32" Air Hydraulic Riveter
ZT0616V
5/32" Air Hydraulic Riveter-Vacuum
Max. 4.0mm standard & structural
blind rivet in all material

Model	Traction Power lbf(kgf)	Stroke Length inch(mm)	Net Weight lbs(kgs)	Operating Air Pressure psi(bar)	Min. Hose Size inch(mm)	Noise Level db(A)	Vibration m/s²	Nosepieces Equipped inch(mm)
ZT0616	1300(600)	5/8(16)	3.1(1.4)	90(6.2)	3/8(10)	79	<2.5	3/32(2.4)1/8(3.2) 5/32(4.0) all material
ZT0616V	1500(700)	5/8(16)	3.1(1.4)	90(6.2)	3/8(10)	79	<2.5	3/32(2.4)1/8(3.2) 5/32(4.0) all material

Economy Riveter

ZPR1016T
3/16" Air
Hydraulic Riveter

ZPR1016TK
3/16" Air
Hydraulic Riveter Kit

ZPR1116T-3J
1/4" Air Hydraulic Riveter - 3 Jaws
(for 1/4" Alum/Steel Blind Rivets)

ZT1918T
1/4" Air
Hydraulic Riveter

Model	Traction Power lbf(kgf)	Stroke Length inch(mm)	Net Weight lbs(kgs)	Operating Air Pressure psi(bar)	Avg. Air Cons. cu.ft/stroke	Min. Hose Size inch(mm)	Noise Level db(A)	Vibration m/s²	Nosepieces Equipped inch(mm)
ZPR1016T	2304(1045)	5/8(16)	3.262(1.48)	90(6.2)	0.125(3.5)	1/4(6.4)	70	<2.5	3/32(2.4)1/8(3.2) 5/32(4.0)3/16(4.8)
ZPR1116T-3J	2304(1045)	5/8(16)	3.262(1.48)	90(6.2)	0.125(3.5)	1/4(6.4)	70	<2.5	3/32(2.4)1/8(3.2) 5/32(4.0)3/16(4.8) 1/4(6.4)
ZT1918T	4200(1900)	23/32(18)	4.3(2)	90(6.2)	0.125(3.5)	3/8(10)	70	<2.5	3/32(2.4)1/8(3.2) 5/32(4.0)3/16(4.8)1/4(6.4)

Products and specifications subject to change without prior notice

NEW PRODUCT

ZRG510

3/16" Capacity Air Riveter

- Economically designed for heavy-duty, high speed production applications.
- Constructed without hydraulics for trouble-free riveting and easy maintenance.
- Comes with nosepieces for 1/8", 5/32" and 3/16" rivets.
- 100% interchangeable parts with POP PRG510A

ZRG540

1/4" Capacity Air Hydraulic Riveter

- Extremely strong, robust and reliable heavy duty tool that sets 3/32" – 1/4" diameter rivets in varying rivet head styles.
- 100% interchangeable parts with POP PRG540.

POP is a division of Stanley Black & Decker

Model	Traction Power lbf(kgf)	Stroke Length inch(mm)	Net Weight lbs(kgs)	Operating Air Pressure psi(bar)	Min. Hose Size inch(mm)	Air Inlet Size inch-NPT/PT	Blind Rivet Setting Capacity
ZRG510	1000(454)	0.59(15)	3.66(1.66)	90(6.2)	3/8(9.5)	1/4	Standard blind rivets from 3/32", 1/8", 5/32" in all materials and 3/16" in Aluminum only
ZRG540	3000(1362)	0.69(17.5)	4.5(2.04)	90(6.2)	3/8(9.5)	1/4	Standard blind rivets from 3/32", 1/8", 5/32", 3/16" in all material and 1/4" in Steel only

Air Hydraulic Blind Rivet Installation Tool

Features

- Module unit mechanism enables more common parts to be used in similar designed tools.
- Designed with patented "Module units assembled in composite clam shell housing" for operator's comfort and ease of service.
- Ergonomic texture coated composite housing for operator's comfort.
- Build-in exhaust muffler to minimize the tool noise efficiently.
- Rocker type trigger for ease of operational control.
- Perfect tool for automotive & general industries.
- Optional Jaw Pusher & Nose Pieces for small size rivets.

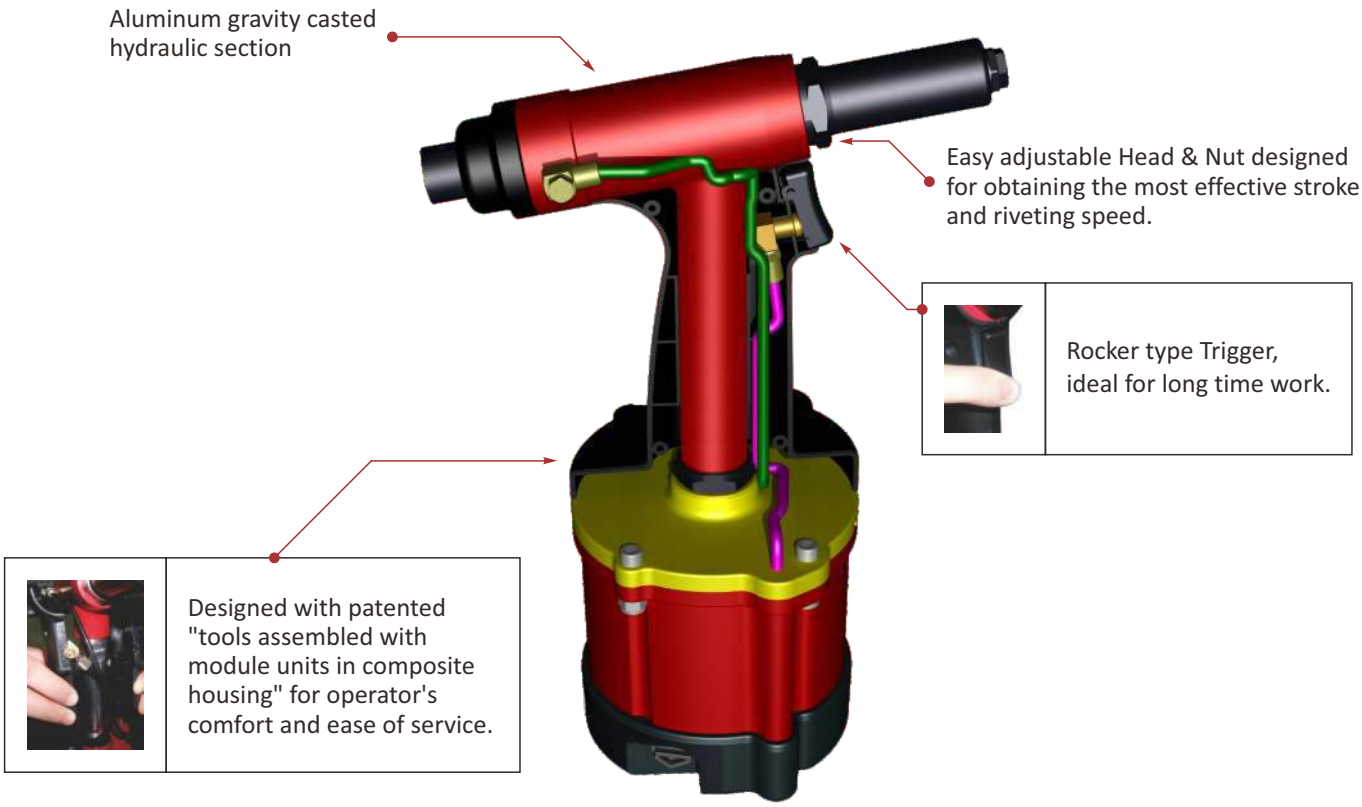

Applications

- Wherever the fastening methods like: welding, sheet metal screw, bolt, nut, washer, tubular, semi-tubular and solid rivets and adhesives are applied, can be substituted by blind rivets.
- All models above are good for setting standard blind rivets and structural blind rivets.

DO NOT apply air pressure over 110 psi / 7.5 bar to these tools.

*Please refer to the blind rivet specification to ensure the tensile strength is lower than the traction power of the model you select.

Model	Traction Power lbf(kgf)	Stroke Length inch(mm)	Net Weight lbs(kgs)	Operating Air Pressure psi(bar)	Min. Hose Size inch(mm)	Air Inlet Size inch-NPT/PT	Nosepieces Equipped inch(mm)
ZT-1020 ZT-1020V	2248(1022)	43/64(17)	4.3(1.95)	90(6.2)	3/8(10)	1/4	3/32(2.4)1/8(3.2) 5/32(4.0)3/16(4.8)1/4(6.4)

Products and specifications subject to change without prior notice

Aviation Nut-Plate Installation Tool

Features

- The ZT0520CM is an air hydraulic tool designed for the installation of nut-plate rivets.
- Optional feature (D) for the most advanced patented digital module to enable the operators know the rivet tool setting capacity instantly under various air supply condition and the rivet setting cycles performed during their working period.
- It will also remind operators when to do service or maintenance to the tool in proper interval.
- It will help to cease the controversy about warranty issue especially if the tool has been misused or abused with abnormal high air pressure which exceeds the design specification.
- Built with patented "Module units assembled in composite clam shell housing" for the ease of tool service.
- Patented "Broken mandrel vacuum collection system" for the cleanliness and safety of work area.
- Forged and heat-treated aluminum alloy made Hydraulic Section for the best rigidity.
- Swivel air inlet design for maneuverability works.
- Please refer to the chart below to select the proper pulling heads. All heads need to purchase separately.

ZT0520CM

Lightweight Nut-Plate Riveter

PULLING HEADS AVAILABLE

Pulling heads are not furnished with riveter and must be ordered separately.

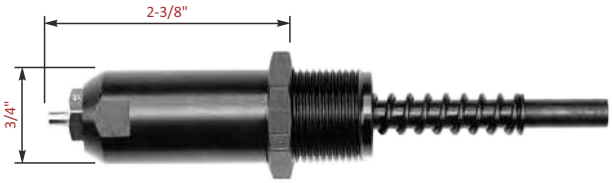

H702-3NPR Straight Pulling Head

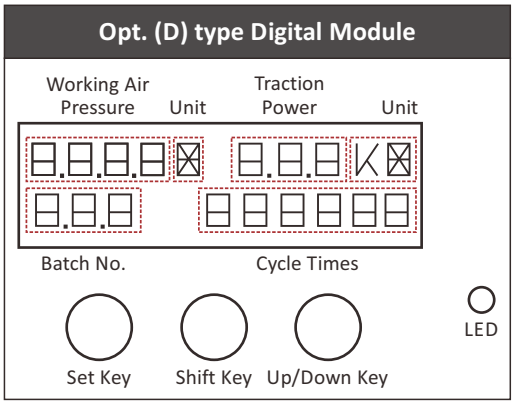

Pulling Head	Rivet Type	Rivet Diameters	Type	Nosepiece*	Maximum Grip
H702-3NPR	Nut-Plate	-3, 2.5 mm	Straight	728A9-3	-12
	Nut-Plate	-4, 3.0 mm	Straight	728A9-104	-12
	SPR®	-3	Straight	728A9-3	All grips

*Both nosepieces included with pulling head.
More detailed information for these pulling heads may be found at More details about this tool can be found on our website at www.cherryaerospace.com by selecting "Tooling Manuals" from the "Technical" drop down menu.

DO NOT apply air pressure over 110 psi / 7.5 bar to these tools.

SPR® is a registered trademark of Cherry Aerospace Fasteners.

Model	Traction Power lbf(kgf)	Stroke Length inch(mm)	Net Weight lbs(kgs)	Nosepieces	Max. Capacity
ZT0520CM ZT0520CMD	1102(500)	51/64(20)		Refer to chart above	Refer to chart above

- Operating Air Pressure: 90PSI/6.2bar
- Air Inlet Size: 1/4 inch-NPT/PT
- Min. Hose Size: 3/8"(10mm)

Features

- The ZT0911CM, ZT0922CM, ZT1218CM & ZT1415CM air hydraulic tools are designed for the installation of CherryMAX® fasteners, CherryMAX® AB, CherryLOCK® A wiredraw blind fasteners, MBC® and nut-plate blind rivets.
- Optional feature (D) for the most advanced patented digital module to enable the operators know the rivet tool setting capacity instantly under various air supply condition and the rivet setting cycles performed during their working period.
- It will also remind operators when to do service or maintenance to the tool in proper interval.
- It will help to cease the controversy about warranty issue especially if the tool has been misused or abused with abnormal high air pressure which exceeds the design specification.
- Built with patented "Module units assembled in composite clam shell housing" for the ease of tool service.
- Patented "Broken mandrel vacuum collection system" for the cleanliness and safety of work area.
- Forged and heat-treated aluminum alloy made Hydraulic Section for the best rigidity.
- Swivel air inlet design for maneuverability works.
- Please refer to the chart below to select the proper pulling heads. All heads need to purchase separately.

ZT0911CM Lightweight Riveter

ZT0922CM Light Duty / Long Stroke Riveter
ZT1218CM Medium duty / Lightweight Riveter
ZT1415CM Medium duty / Lightweight Riveter

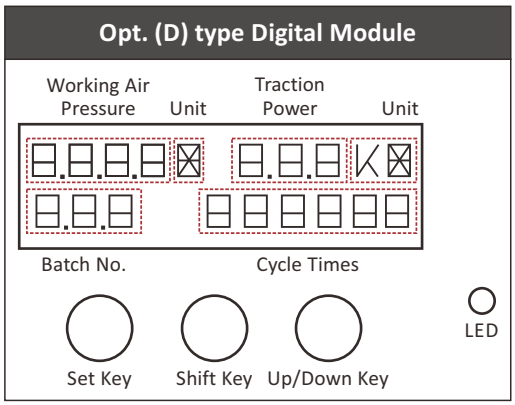

DO NOT apply air pressure over 110 psi / 7.5 bar to these tools.

CherryMAX® , CherryLOCK®, MBC® & MAXIBOLT® are the registered trademark of Cherry Aerospace Fasteners.

Model	Traction Power lbf(kgf)	Stroke Length inch(mm)	Net Weight lbs(kgs)	Nosepieces	Max. Capacity
ZT0911CM ZT0911CMD	1984(900)	7/16(11)		Refer to chart below	Refer to chart below
ZT0922CM ZT0922CMD	1984(900)	7/8(22)		Refer to chart below	Refer to chart below
ZT1218CM ZT1218CMD	2646(1200)	23/32(18)		Refer to chart below	Refer to chart below
ZT1415CM ZT1415CMD	3086(1400)	19/32(15)		Refer to chart below	Refer to chart below

- Operating Air Pressure: 90PSI/6.2bar
- Air Inlet Size: 1/4 inch-NPT/PT
- Min. Hose Size: 3/8"(10mm)

Products and specifications subject to change without prior notice

PULLING HEADS AVAILABLE FOR THE SECTION 1 RIVETERS

Pulling heads are not furnished with riveter and must be ordered separately. More detailed information for these pulling heads may be found at More details about this tool can be found on our website at www.cherryaerospace.com by selecting "Tooling Manuals" from the "Technical" drop down menu.

H701B-456 Straight

H747-456 Straight

H753A-456 Right Angle

H782 Offset

H781A-456 Offset

PULLING HEADS				
Pulling Head	Type	Adaptor	Fastener Installed[1]	
			Rivet Type	Diameters
H701B-456 H747-456[1]	Straight	–	CherryMAX®	-4, -5, -6
	Straight	–	CherryMAX® 'AB'	-4, -5, -6[3]
	Straight	–	MBC® L/C	-4, -5, -6
	Straight	–	SST®	-4, -5, -6
H753A-456[1]	Right Angle	–	CherryMAX®	-4, -5, -6
	Right Angle	–	CherryMAX® 'AB'	-4, -5, -6[3]
	Right Angle	–	SST®	-4, -5, -6
H781A-456 H782[1]	Offset	–	CherryMAX®	-4, -5, -6
	Offset	–	CherryMAX® 'AB'	-4, -5, -6
	Offset	–	SST®	-4, -5, -6
H747-3A, -4A, -5A, -6A	Straight	–	CherryLOCK® 'A'	-3, -4, -5, -6
H9015-3C, -4C, -5C, -6C	Straight	704A9	MS/Nutplate Rivets	-3, -4, -5, -6
H746-4MBC, -5 MBC, -6MBC	Straight	–	Std. MBC®	-4, -5, -6
H704-( )NP	Straight	–	Rivetless NutPlate	See Page 25
H704-( )NPC	Straight	–	Rivetless Nutplates for Composite Structures	See Page 25

RIVETER GRIP CAPABILITY[4]				
Fastener Type	Riveter Model			
	ZT1218CM	ZT1415CM	ZT0911CM	ZT0922CM
CherryMAX®	All Grips	All Grips	All Grips	All Grips
CherryMAX® AB	-05	-05	-04	-09
CherryLOCK® "A"	-05	-05	-04	-09
Standard MBC® and MBC® L/C	5[5]	5[5]	4[5]	All Grips
SST®	All Grips	All Grips	All Grips	All Grips
MS/Nutplate Rivets	-05	-05	-04	All Grips
MAXIBOLT® Both Types (U and S)	All Grips	All Grips	All Grips	All Grips[2]
Rivetless NutPlate	All Grips	All Grips	–	–

Notes:
1. See Pulling Head Tool Sheet for other configurations and fastener capabilities.
2. ZT0922CM is only recommended for -4 and -5 diameter MAXIBOLT® fasteners due to power limitations.
3. H747-456, H753A-456 and H782 can to be re-configured in order to install -6" aluminum fasteners; more information at www.cherryaerospace.com by selecting "Tooling Manuals" from the "Technical" drop down menu.
4. Grip capability may be extended by "double stroking".
5. Grip as identified by NAS1719, NAS1720, and NAS1721 (see Standards Page for the fastener to be installed).

Aviation Lock Bolt & Blind Bolt Installation Tools

Features

- The ZT1914CM & ZT3213CM air hydraulic tools are designed for the installation of Lock Bolt & Blind Bolt type fasteners.
- Optional feature (D) for the most advanced patented digital module to enable the operators know the rivet tool setting capacity instantly under various air supply condition and the rivet setting cycles performed during their working period.
- It will also remind operators when to do service or maintenance to the tool in proper interval.
- It will help to cease the controversy about warranty issue especially if the tool has been misused or abused with abnormal high air pressure which exceeds the design specification.
- Built with patented "Module units assembled in composite clam shell housing" for the ease of tool service.
- Patented "Broken mandrel vacuum collection system" for the cleanliness and safety of work area. (for ZT1914CM)
- Forged and heat-treated aluminum alloy made Hydraulic Section for the best rigidity.
- Swivel air inlet design for maneuverability works.
- Please refer to the chart below to select the proper pulling heads. All heads need to purchase separately.

ZT1914CM
Lightweight Lockbolt Riveter

ZT3213CM
Medium Duty Lockbolt Riveter

Opt. (D) type Digital Module

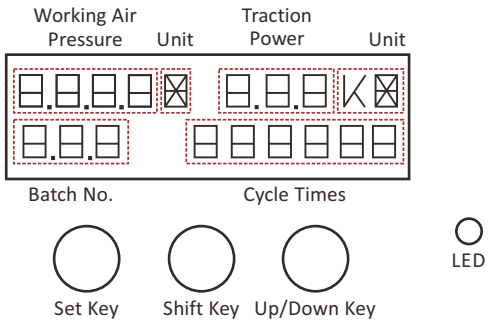

DO NOT apply air pressure over 110 psi / 7.5 bar to these tools.

CherryMAX® , CherryLOCK®, MAXIBOLT® & MAXIBOLT PLUS® are the registered trademark of Cherry Aerospace Fasteners.

Model	Traction Power lbf(kgf)	Stroke Length inch(mm)	Net Weight lbs(kgs)	Nosepieces	Max. Capacity
ZT1914CM ZT1914CMD	4189(1900)	9/16(14)		Refer to chart below	Refer to chart below
ZT3213CM ZT3213CMD	7055(3200)	33/64(13)		Refer to chart below	Refer to chart below

- Operating Air Pressure: 90PSI/6.2bar
- Air Inlet Size: 1/4 inch-NPT/PT
- Min. Hose Size: 3/8"(10mm)

Products and specifications subject to change without prior notice

PULLING HEADS AVAILABLE FOR THE ZT1914CM & ZT3213CM RIVETERS

Pulling heads are not furnished with riveter and must be ordered separately.

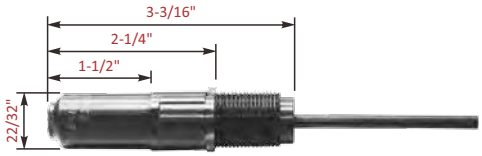

H1900-456 Straight Pulling Head

744-300 Adapter

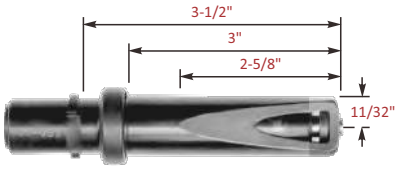

H513SRC-06-35 Straight Pulling Head

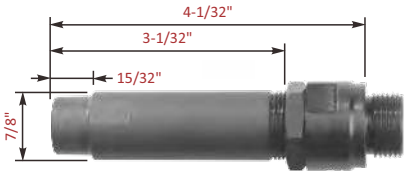

H84B-568 Straight Pulling Head

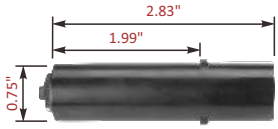

H84A-8 Straight Pulling Head

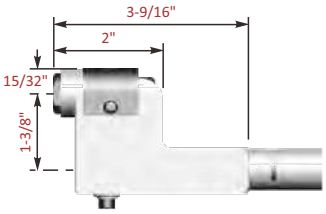

H563-4B, **H563-5B**, **H563-6B** Offset Pulling Head

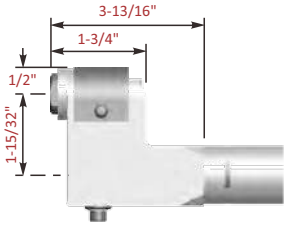

H562-6B, **H562-8B** Offset Pulling Head

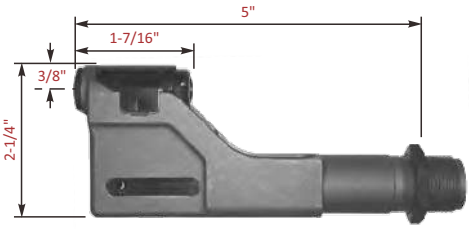

H856-6MB Offset Pulling Head

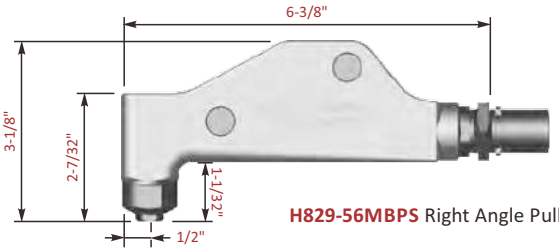

H829-56MBPS Right Angle Pulling Head

Pulling Heads for ZT1914CM/ZT3213CM tools					
Fastener Type	**Pulling Head Type**	**Tool Part Number**		**Adaptor**	**Diameter**
		MAXIBOLT® S TYPE	MAXIBOLT® U TYPE		
MAXIBOLT®	Straight	H83B-5MB	H83B-5MBU	None	-05
	Straight	H83B-6MB	H83B-6MBU	None	-06
	Straight	H84A-8MB	H84A-8MBU	None	-08
	Offset	H856-6MB	H856-6MB+856-003	744-200	-06
	Right Angle	H829-5MB	H829-5MBU	None	-05
	Right Angle	H829-6MB	H829-6MBU	None	-06
	Right Angle	H829-8MB	H829-8MBU	None	-08
Lockbolt	Straight	H513, H513S, H513SR		None	-4, -5, -6, -8
	Offset	H563-4B/5B/6B		None	-4, -5,-6
	Offset	H562-6B/8B		744-100	-6, -8
MAXIBOLT PLUS®	Straight	H84B-568*		None	-5, -6, -8
	Right Angle	H829-56MBPS		None	-5, -6
NAS1919/1921	Straight	H1900-456		None	-4, -5, -6
CherryMAX®	Straight	H84A-8		None	-8
	Right Angle	H829-8		None	-5, -6, -8
CherryMAX® 'AB' CherryLOCK® "A"	Straight	H84-8CLA		None	-8

More details about these pulling heads may be found on our website at www.cherryaerospace.com by selecting "Tooling Manuals" from the "Technical" drop down menu.

Aviation Split type Lock Bolt & Blind Bolt Installation Tool

Features

- The ZT4125SCM is a split type air hydraulic tool designed for the installation of Lock Bolt & Blind Bolt type fasteners.
- The advantage of this split type with 3M length of hydraulic hose set design is to have the power unit placed on the floor, keep it away from the structure, easier access in space constricted areas of the aircraft and more ergonomic to work with for the operator.
- Forged and heat-treated aluminum alloy made Hydraulic Section for the best rigidity.
- Swivel air inlet design for maneuverability works.
- Please refer to the chart below to select the proper pulling heads. All heads need to purchase separately.

DO NOT apply air pressure over 110 psi / 7.5 bar to these tools.

*Please refer to the blind rivet specification to ensure the tensile strength is lower than the traction power of the model you select.

*Below specification are measured with 1 meter length, 1/8" I.D hydraulic hose

Model	Traction Power lbf(kgf)	Stroke Length inch(mm)	Net Weight lbs(kgs)	Nosepieces	Max. Capacity
ZT4125SCM	9039(4100)	63/64(25)		Pulling head need to purchase separately.	Max. 3/16" (4.8mm) Cherry Max Rivet

- Operating Air Pressure: 90PSI/6.2bar
- Air Inlet Size: 1/4 inch-NPT/PT
- Min. Hose Size: 3/8"(10mm)

Products and specifications subject to change without prior notice

PULLING HEAD AVAILABILITY

Pulling heads are not furnished with riveter and must be ordered separately.

ZT4125SCM Pulling Head Selection Chart

Lockbolt Dia.	Length from Tool Face (except column 3)	Short Pintail	1.Straight Nose		2.Chisel Nose	3.Offset
			Swivel	Swivel Self-Releasing	Swivel Self-Releasing	
-4	2"	H513-04-20*	–	–	–	H563-4B*
	3-1/2"	H513-04-35*	–	–	–	H563SP-4B*
-5	2"	–	H513S-05-20*	H513SR-05-20*	H513SRC-05-20*	H563-5B*
	3-1/2"	H513-05-35*	H513S-05-35	H513SR-05-35	H513SRC-05-35*	H563SP-5B
-6	2"	H513-06-20*	H513S-06-20*	H513SR-06-20*	H513SRC-06-20*	H563-6B*
	2-3/8"	–	H513S-06-24	H513SR-06-24	–	H562-6B
	3-1/2"	–	H513S-06-35*	H513SR-06-35*	H513SRC-06-35*	H563SP-6B*
	4-13/16"	–	H513S-06-48	H513SR-06-48	–	–
	6"	H513-06-60*	–	–	–	–
-8	2-3/8"	–	H513S-08-24	H513SR-08-24	–	H562-8B
	3-1/2"	H513-08-35*	H513S-08-35*	–	–	–
	4-16/16"	–	H513S-08-48	H513SR-08-48	H513SRC-08-48	–
-10	2-11/16"	–	H513S-10-27	H513SR-10-27	–	–
	4-3/16"	–	H513S-10-42	H513SR-10-42	–	–
-12	2-11/16"	–	H513S-12-27	H513SR-12-27	–	–
	4-3/16"	–	H513S-12-42	H513SR-12-42	–	–

*These parts require the 552 adapter when used on ZT4125SCM.
Parts with an asterisk fit directly on the ZT1914CM.
NOTES: Parts with no asterisk fit directly on ZT1914CM.
After the H513 in part numbers, S = Swivel, R = Self Releasing C = Chisel Nose Straight Lock bolt pulling head part numbers indicate pulling head length and diameter.
Example: In Part No. H513-05-35 the -05 indicates -5 diameter and -35 indicates that the pulling head extends 3.5" beyond gun line.
After H563, SP = Short Pintail

CherryMAX® Pulling Heads & Adapter**

	Part No.	Diameter	Adapter
Straight	H84A-8	-8	552
Offset	H827-8	-8	560-070
Right Angle	H829-8	-8	552

**CherryMAX® adapter and pulling heads can install CherryMAX®, CherryMAX® 'AB', and SST®rivets.

MAXIBOLT® Pulling Heads & Adapter

	Part No.	Diameter	Adapter		Part No.	Diameter	Adapter
Straight Pulling Head	H652-8MB	-8	–	Offset	H856-6MB	-6	560-070
	H83B-5MB	-5	552	Right Angle	H829-5MB	-5	552
	H83B-5MBU	-5	552		H829-5MBU	-5	552
	H83B-6MB	-6	552		H829-6MB	-6	552
	H83B-6MBU	-6	552		H829-6MBU	-6	552
	H84A-8MB	-8	552		H829-8MB	-8	552
	H84A-8MBU	-8	552		H829-8MBU	-8	552
	H744-5MB	-5	560-070				
	H744-6MB	-6	560-070				

ZRA-48
3/16" Riveter Adaptor

ZRA-64
1/4" Riveter Adaptor

ZARA-48
3/16" Riveter Angle Adaptor

Model	Riveter Adaptor inch(mm)	Min. torque strength ft/lbs(Nm)	Max. rpm	Nosepiece inch(mm)	Hex shank inch(mm)	Dimension mm
ZRA-48	3/16(4.8)	8(11)	1000	3/32(2.4)1/8(3.2) 5/32(4.0)3/16(4.8)	1/4(6.35)	59 x 158
ZRA-64	1/4(6.4)	37(50)	800	1/8(3.2)5/32(4.0) 3/16(4.8)1/4(6.4)	1/4(6.35)	59 x 173
ZARA-48	3/16"(4.8)	8(11)	1000	3/32(2.4)1/8(3.2) 5/32(4.0)3/16(4.8)	1/4(6.35)	L195 x H185 x W58.5

Rivet Nut Adaptor Kit

Features

- A revolutionary accessory to insert rivet nuts.
- Simply attach this adaptor to your cordless, electric & pneumatic drills become a rivet nut tool.
- Can set up to max. M10 (3/8"-18) Round / Aluminum.

Applications

- Automotive aftermarket
- Small aircraft and boat repair
- Outdoor rivet nut insert jobs when there is no air supply.
- Residential and commercial construction
- General facility maintenance and repair

Model	Min. torque strength ft/lbs(Nm)	Max. rpm	Nut Nosepiece	Hex shank inch(mm)	Dimension mm
ZNRA-410D For Metric	73.7(100)	800	M4-M5-M6-M8-M10	1/4(6.35)	59 x 180
ZNRA-410DE For Imperial	73.7(100)	800	#8-32, #10-24, #10-32 1/4"-20, 5/16"-18, 3/8"-16	1/4(6.35)	59 x 180

Products and specifications subject to change without prior notice

Air Hydraulic Rivet Nut / Rivet Stud Installation Tool

Features

- Optional (D) type Digital Module to enable operators know the tool's force instantly under various air supply condition and the cycle counter performed during their working period. It also remind operators when to do service or maintenance in proper interval.
- It will help to cease the controversy about warranty issue especially if the tool has been misused or abused with abnormal high air pressure which exceeds the design specification.
- Built with patented "Module units assembled in composite clam shell housing" for the ease of tool service.
- Forged and heat treated aluminum alloy made Hydraulic Section for the best rigidity.
- Easy adjustable Head & Nut designed for obtaining the most effective stroke.
- Ergonomic composite housing for operator's comfort.
- Swivel air inlet design for maneuverability works.

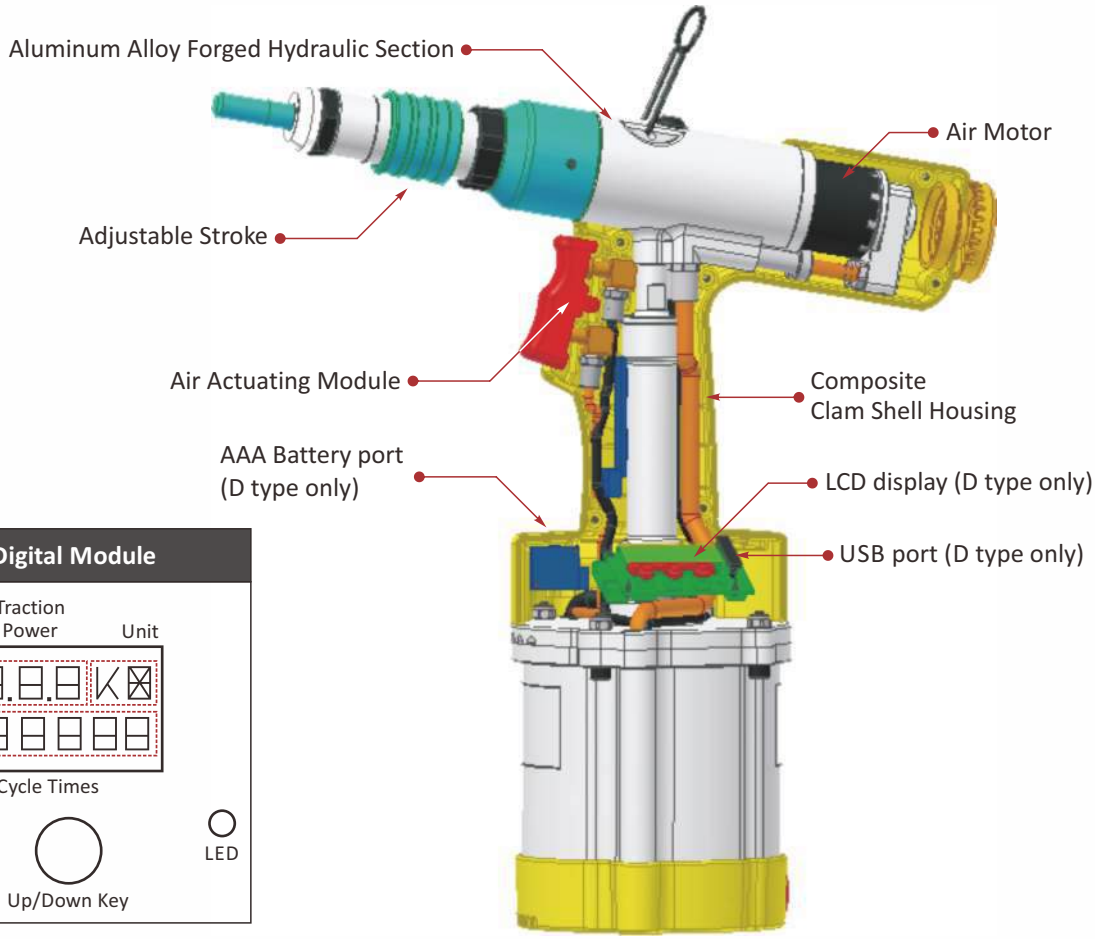

Opt. (D) type Digital Module

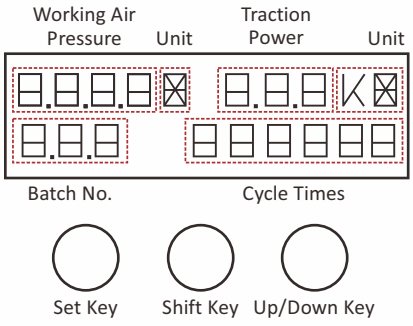

Patent pending in other countries

R.O.C.PAT.:
355976

R.O.C.PAT.:
092648

P.R.C.PAT.:
ZL 94 2 22569.4

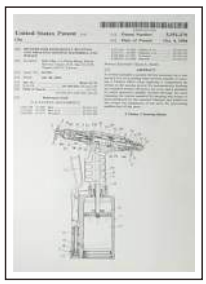

U.S.A.PAT.NO.:
6,149,356

DEUTSCHLAND PAT.:
Nr.20 2007 007 127.2

Air Hydraulic Rivet Nut / Rivet Stud Installation Tool

Rivet Nut Tool

ZRN1606E (D)

#8-32 ~ 1/2"-13 Air Hydraulic Rivet Nut Kit (Digital type)

ZRN1606M (D)

M4~M12 Air Hydraulic Rivet Nut Kit (Digital type)

Rivet Nut Tool

ZRN2508E (D)

#8-32 ~ 1/2"-13 Air Hydraulic Rivet Nut Kit (Digital type)

ZRN2508M (D)

M4~M12 Air Hydraulic Rivet Nut Kit (Digital type)

NEW PRODUCT

Rivet Nut Tool

ZRN1907E

#8-32 ~ 5/16"-18 Air Hydraulic Rivet Nut Kit

ZRN1907M

M4~M8 Air Hydraulic Rivet Nut Kit

Single trigger - Auto Reverse

Rivet Stud Tool

ZRS1606E (D)

#8-32 ~ 3/8"-16 Air Hydraulic Rivet Stud Kit (Digital type)

ZRS1606M (D)

M4~M10 Air Hydraulic Rivet Stud Kit (Digital type)

Rivet Stud Tool

ZRS2508E (D)

#8-32 ~ 3/8"-16 Air Hydraulic Rivet Stud Kit (Digital type)

ZRS2508M (D)

M4~M10 Air Hydraulic Rivet Stud Kit (Digital type)

DO NOT apply air pressure over 110 psi / 7.5 bar to these tools.

*Please refer to the blind rivet specification to ensure the tensile strength is lower than the traction power of the model you select.

Model	Traction Power lbf(kgf)	Stroke Length inch(mm)	Net Weight lbs(kgs)	Rivet Nut / Rivet Stud Max. Capacity
ZRN1606E ZRN1606ED	3500(1600)	1/4(6)	4.9(2.2)	#8-32~3/8"-16 Hex. rivet nut in Steel @ 90psi 1/2"-13 Round rivet nut in Steel @ 100psi
ZRN1606M ZRN1606MD	3500(1600)	1/4(6)	4.9(2.2)	M4~M10 Hex. rivet nut in Steel @ 90psi M12 Round rivet nut in Steel @ 100psi
ZRN2508E ZRN2508ED	5500(2500)	5/16(8)	5.4(2.4)	#8-32~1/2"-13 Hex. rivet nut in all materials
ZRN2508M ZRN2508MD	5500(2500)	5/16(8)	5.4(2.4)	M4~M12 Hex. rivet nut in all materials
ZRS1606E ZRS1606ED	3500(1600)	1/4(6)	4.9(2.2)	#8-32~3/8"-16 Round rivet stud in all materials
ZRS1606M ZRS1606MD	3500(1600)	1/4(6)	4.9(2.2)	M4~M10 Round rivet stud in all materials
ZRS2508E ZRS2508ED	5500(2500)	5/16(8)	5.4(2.4)	#8-32~3/8"-16 Hex. rivet stud in all materials
ZRS2508M ZRS2508MD	5500(2500)	5/16(8)	5.4(2.4)	M4~M10 Hex. rivet stud in all materials
ZRN1907E	4200(1900)	9/32 (7)	4.2(1.9)	#8-32 ~ 5/16"-18 Hex. rivet nut in all materials
ZRN1907M	4200(1900)	9/32 (7)	4.2(1.9)	M4~M8 Hex. rivet nut in all materials

Products and specifications subject to change without prior notice

Accessories

Parts Break Down For Rivet Nut/Rivet Stud:
Customers are welcome to order Bushing or Pull Rod separately.

Examples: order247B32+247A32= order complete set of M4 Bushing+Pull Rod
order247B32= order M4 Bushing

Rivet Nut

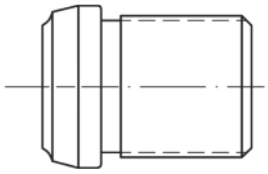

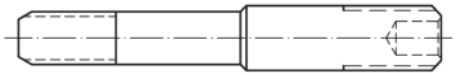

Bolt Bushing				Pull Rod			
Metric		Imperial		Metric		Imperial	
P/N	Used For	P/N	Used For	P/N	Used For	P/N	Used For
258B11	M3	258B21	#6-32	258A11	M3	258A21	#6-32
258B12	M4	258B22	#8-32	258A12	M4	258A22	#8-32
258B13	M5	258B23	#10-24	258A13	M5	258A23	#10-24
258B14	M6	258B24	#10-32	258A14	M6	258A24	#10-32
258B15	M8	258B25	1/4"	258A15	M8	258A25	1/4"-20
258B16	M10	258B26	5/16"	258A16	M10	258A26	5/16"-18
258B17	M12	258B27	3/8"	258A17	M12	258A27	3/8"-16
		258B28	1/2"			258A28	1/2"-13

Rivet Stud

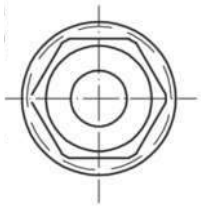

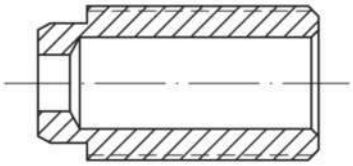

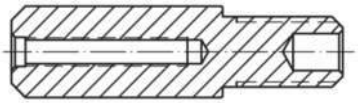

Bolt Bushing				Pull Rod			
Metric		Imperial		Metric		Imperial	
P/N	Used For	P/N	Used For	P/N	Used For	P/N	Used For
247B32	M4	247B42	#8-32	247A32	M4	247A42	#8-32
247B33	M5	247B43	#10-24	247A33	M5	247A43	#10-24
247B34	M6	247B44	#10-32	247A34	M6	247A44	#10-32
247B35	M8	247B45	1/4"	247A35	M8	247A45	1/4"-20
247B36	M10	247B46	5/16"	247A36	M10	247A46	5/16"-18
		247B47	3/8"			247A47	3/8"-16

Air Hydraulic Installation Tool

Features

- Accepts HUCK® - C6L®, Magna Grip®, Magna-Lok®, BOM® & Bobtail® noses or AVDEL® - Avdelok®, Maxlok® & Neobolt® noses.
- Optional (D) type Digital Module to enable operators know the tool's force instantly under various air supply condition and the cycle counter performed during their working period.
- It also remind operators when to do service or maintenance in proper interval.
- It will help to cease the controversy about warranty issue especially if the tool has been misused or abused with abnormal high air pressure which exceeds the design specification.
- Built with patented "Module units assembled in composite clam shell housing" for the ease of tool service.
- Forged and heat treated aluminum alloy made Hydraulic Section for the best rigidity.
- Ergonomic composite housing for operator's comfort.
- Swivel air inlet design for maneuverability of works.

Standard Nose Assembly

HUCK - C6L®
AVDEL - AVDELOK®

202HC1 - 3/16" Fixed Grip Nose
202HC1L - Extended 3/16" Fixed Grip Nose
231HC2 - 1/4" Fixed Grip Nose
231HC2L - Extended 1/4" Fixed Grip Nose

HUCK - MAGAN-GRIP®
AVDEL - MAXLOK®

202HM1 - 3/16" Multi Grip Nose
202HM1L - Extended 3/16" Multi Grip Nose
202HM2 - 1/4" Multi Grip Nose
202HM2L - Extended 1/4" Multi Grip Nose

AVDEL - NEOBOLT XT®

203BOB08 - 1/4" Short Tail Nose

HUCK - BOBTAIL®

203NB08 - 1/4" Groove Tail Nose

HUCK - BOM®
AVDEL - AVBOLT®

202HB2 - 1/4" Blind Bolt Nose

2318RS (2 Jaws)
3/16" & 1/4" Blind Rivet Conversion Kit

Opt. Extended Nose Assembly

2318RS-4 (2 Jaws)
1/8" & 5/32" Blind Rivet Conversion Kit

2318RS-8 (3 Jaws)
5/16" Blind Rivet Conversion Kit

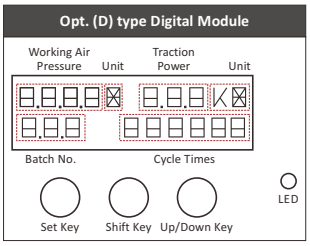

ZT2318-HA(D)
1/4" Air Hydraulic Installation Tool (Digital type)
Nose sold separately.

ZT2318H(D)
1/4" Air Hydraulic Lock Bolt Tool (Digital type)
ONE std. lock bolt nose included.

NEW PRODUCT

ZT2318HK(D)
1/4" Air Hydraulic Lock Bolt Tool Kit (Digital type)
FOUR std. lock bolt noses & 3/16", 1/4" blind rivet conversion kit included.

ZT2318B(D)
1/4" Air Hydraulic BOM® Installation Tool (Digital type)

ZT1528BT(D)
1/4" Air Hydraulic BOBTAIL® Installation Tool (Digital type)

ZT1528NB(D)
1/4" Air Hydraulic NEOBOLT® Installation Tool (Digital type)

DO NOT apply air pressure over 110 psi / 7.5 bar to these tools.
*Please refer to the blind rivet specification to ensure the tensile strength is lower than the traction power of the model you select.

Model	Traction Power lbf(kgf)	Stroke Length inch(mm)	Net Weight lbs(kgs)	Nose Supplied with the Tool
ZT2318-HA(D)	5000(2300)	23/32(18)	5.6(2.5)	Supply without Nose
ZT2318H(D)	5000(2300)	23/32(18)	5.6(2.5)	Choose ONE std. Lock Bolt Nose.
ZT2318HK(D)	5000(2300)	23/32(18)	5.6(2.5)	Choose FOUR std. Lock Bolt Noses & 3/16", 1/4" blind rivet conversion kit included.
ZT2318B(D)	5000(2300)	23/32(18)	5.6(2.5)	202HB2 - 1/4" Blind Bolt Nose
ZT1528BT(D)	5000(2300)	23/32(18)	5.6(2.5)	203BOB08 - 1/4" Short Tail Nose
ZT1528NB(D)	5000(2300)	23/32(18)	5.6(2.5)	203NB08 - 1/4" Groove Tail Nose

HUCK®,C6L®, MAGAN-GRIP® ARE REGISTERED TRADEMARKS OF HOWMET AEROSPACE INC.
BOBTAIL® IS A REGISTERED TRADEMARK OF ALCOA INC. BOM® IS A REGISTERED TRADEMARK OF ARCONIC INC.
AVDEL®,MONOBOLT®, NEOBOLT®, AVBOLT®, MAXLOK®, AVDELOK® ARE REGISTERED TRADEMARKS OF STANLEY ENGINEERED FASTENING.

Products and specifications subject to change without prior notice

Air Hydraulic Installation Tool

Features

- Optional (D) type Digital Module to enable operators know the tool's force instantly under various air supply condition and the cycle counter performed during their working period.
- It also remind operators when to do service or maintenance in proper interval.
- It will help to cease the controversy about warranty issue especially if the tool has been misused or abused with abnormal high air pressure which exceeds the design specification.
- Built with patented "Module units assembled in composite clam shell housing" for the ease of tool service.
- Forged and heat treated aluminum alloy made Hydraulic Section for the best rigidity.
- Ergonomic texture coated composite housing for operator's comfort.
- Swivel air inlet design for maneuverability of works.
- May require more than (2) pulls for 3/8" Monobolt®
- Nose assembly need to purchase separately.

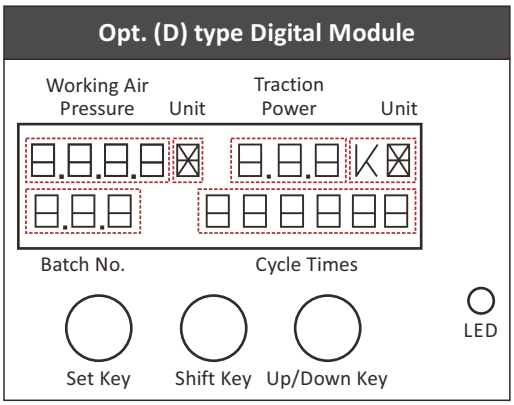

Model	Traction Power lbf(kgf)	Stroke Length inch(mm)	Net Weight lbs(kgs)	Nose Supplied with the Tool	Max. Capacity
ZT3213 ZT3213D	7050(3200)	33/64(13)	6.4(2.9)	Sold Separately	3/8" MONOBOLT® in Steel or 3/8" C6L® in Aluminum.

MONOBOLT® IS A REGISTERED TRADEMARK OF AVDEL UK LIMITED.
C6L® IS A REGISTERED TRADEMARK OF HOWMET AEROSPACE.

Tool Dimensions

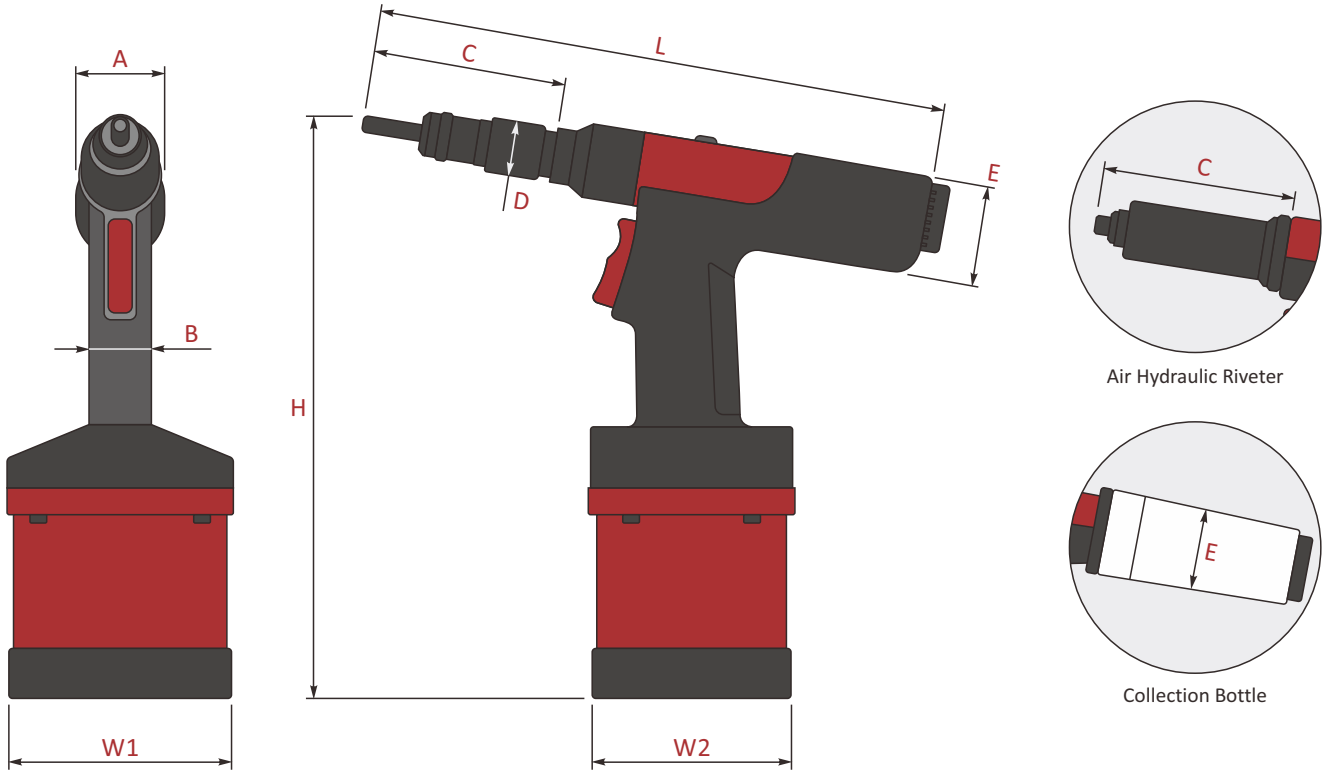

Model	L inch(mm)	W1 inch(mm)	W2 inch(mm)	H inch(mm)	A inch(mm)	B inch(mm)	C inch(mm)	D inch(mm)	E inch(mm)
ZT0520(D)	11.85(301)	4.65(118)	4.13(105)	10.79(274)	1.89(48)	1.18(30)	3.13(79.5)	0.91(23)	1.87(47.5)
ZT0715(D)	11.85(301)	4.65(118)	4.13(105)	10.79(274)	1.89(48)	1.18(30)	3.13(79.5)	0.91(23)	1.87(47.5)
ZT0922(D)	11.73(298)	4.65(118)	4.13(105)	12.01(305)	1.89(48)	1.18(30)	3.01(76.5)	0.91(23)	1.87(47.5)
ZT1218(D)	11.73(298)	4.65(118)	4.13(105)	12.01(305)	1.89(48)	1.18(30)	3.01(76.5)	0.91(23)	1.87(47.5)
ZT1725(D)	12.95(329)	5.35(136)	4.88(124)	12.64(321)	1.89(48)	1.18(30)	3.58(91)	-	1.87(47.5)
ZT1528(D)	12.95(329)	5.35(136)	4.88(124)	12.64(321)	1.89(48)	1.18(30)	3.58(91)	-	1.87(47.5)
ZT2021(D)	12.95(329)	5.35(136)	4.88(124)	12.64(321)	1.89(48)	1.18(30)	3.58(91)	-	1.87(47.5)
ZT2318(D)	12.95(329)	5.35(136)	4.88(124)	12.64(321)	1.89(48)	1.18(30)	3.58(91)	-	1.87(47.5)
ZT2318H(D)	12.95(329)	5.35(136)	4.88(124)	12.64(321)	1.89(48)	1.18(30)	3.58(91)	-	1.87(47.5)
ZRN1606E(D)	11.73(298)	4.65(118)	4.13(105)	10.91(277)	-	1.18(30)	3.01(76.5)	0.91(23)	1.87(47.5)
ZRN1606M(D)	11.73(298)	4.65(118)	4.13(105)	10.91(277)	-	1.18(30)	3.01(76.5)	0.91(23)	1.87(47.5)
ZRS1606E(D)	11.73(298)	4.65(118)	4.13(105)	10.91(277)	-	1.18(30)	3.01(76.5)	0.91(23)	1.87(47.5)
ZRS1606M(D)	11.73(298)	4.65(118)	4.13(105)	10.91(277)	-	1.18(30)	3.01(76.5)	0.91(23)	1.87(47.5)
ZRN2508E(D)	11.73(298)	4.65(118)	4.13(105)	12.01(305)	-	1.18(30)	3.01(76.5)	0.91(23)	1.87(47.5)
ZRN2508M(D)	11.73(298)	4.65(118)	4.13(105)	12.01(305)	-	1.18(30)	3.01(76.5)	0.91(23)	1.87(47.5)
ZRS2508E(D)	11.73(298)	4.65(118)	4.13(105)	12.01(305)	-	1.18(30)	3.01(76.5)	0.91(23)	1.87(47.5)
ZRS2508M(D)	11.73(298)	4.65(118)	4.13(105)	12.01(305)	-	1.18(30)	3.01(76.5)	0.91(23)	1.87(47.5)

Products and specifications subject to change without prior notice

Split Type Air Hydraulic Rivet / Rivet Nut / Lock Bolt Installation Tools

Features

- Forged & heat treated aluminum alloy made hydraulic section for the best rigidity.
- Light weight pistol head.
- Easy to reaches inaccessible area.
- Utility Pouch for Shoulder or Waist.

ZT0518S / ZT0920S
ZT1626S / ZT2420-8S
Split Type Riveter w/vacuum

ZT2420HSN
ZT2420HS / ZT2420HSK
Split Type Lock Bolt Tool

ZRN1811ES
ZRN1811MS
Split Type Rivet Nut Tool

Standard setup for 1M length

ZTXXXXX

+

HH1R/HH1N
1m * 1/8" I.D. hyd. hose kit
w/quick change coupler

+

CHBT-004
Pouch

Standard setup for 3M length

ZTXXXXX

+

HH3R/HH3N
3m * 1/4" I.D. hyd. hose kit
w/quick change coupler

+

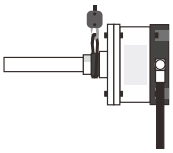

Hook on Spring balancer

DO NOT apply air pressure over 110 psi / 7.5 bar to these tools.
*Please refer to the blind rivet specification to ensure the tensile strength is lower than the traction power of the model you select.
*Below specification are measured with 1 meter length, 1/8" I.D hydraulic hose

Model	Traction Power lbf(kgf)	Stroke Length inch(mm)	Handle Net Weight lbs(kgs)	Nose Supplied with the Tool	Max. Capacity
ZT0518S	1100(500)	23/32(18)	2.2(1)	3/32(2.4)1/8(3.2) 5/32(4.0)	Max. 5/32"(4.0mm) structural rivets in all materials
ZT0920S	2000(920)	51/64(20)	2.2(1)	5/32(4.0)3/16(4.8) MONOBOLT® 3/16(4.8)	Max. 3/16"(4.8mm) structural rivets in all materials
ZT1626S	3500(1600)	1-1/32(26)	2.75(1.25)	3/16(4.8)1/4(6.4) MONOBOLT® 3/16(4.8)1/4(6.4)	Max. 1/4"(6.4mm) structural rivets in all materials
ZT2420-8S	5200(2400)	51/64(20)	2.75(1.25)	5/16(7.8)	Max. 5/16"(7.8mm) structural rivets in all materials
ZT2420HSN	5200(2400)	51/64(20)	2.75(1.25)	Sold Separately	Max. 1/4" (6.4mm) lock bolts in all materials
ZT2420HS	5200(2400)	51/64(20)	2.75(1.25)	Choose ONE std. Lock Bolt Nose.	Max. 1/4" (6.4mm) lock bolts in all materials
ZT2420HSK	5200(2400)	51/64(20)	2.75(1.25)	Choose FOUR std. Lock Bolt Noses & 3/16", 1/4" blind rivet conversion kit included.	Max. 1/4" (6.4mm) lock bolts in all materials

MONOBOLT® IS A REGISTERED TRADEMARK OF AVDEL UK LIMITED.

Model	Traction Power lbf(kgf)	Stroke Length inch(mm)	Handle Net Weight lbs(kgs)	Max. Capacity
ZRN1811ES	3900(1800)	7/16(11)	3.3(1.5)	#8-32~1/2"-13 rivet nut in Hex./Steel
ZRN1811MS	3900(1800)	7/16(11)	3.3(1.5)	M4~M12 rivet nut in Hex./Steel

Split type tool - Product Code Creator

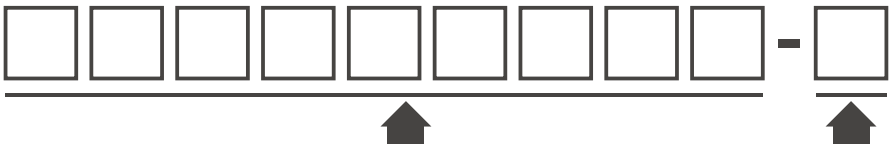

Fill in model number (Example: **XX**ZT0518S)

length of hydraulic hose (1or3)

3/8"(9.5mm) Split type Pneudraulic Installation tool

Features

- Light weight pistol handle easy to use and reach to inaccessible area.
- Designed to install a wide range of 3/8" blind fasteners also Pin & Collar Fasteners.
- Low operating hydraulic pressure design for more durable hydraulic sealing mechanism.
- Forged & heat treated aluminum alloy made hydraulic section for the best rigidity.
- Portable intensifier instead of high cost hydraulic power unit.
- Custom designs are welcome.
- 3M length hydraulic hose set is included.
- Nose sold separately.
- ZT4125S capable to set 3/8" C6L®, Magna-Grip®, Magna-Lok®, Avdelok®, Maxlok®, Monobolt® & Avtainer® fasteners.

Model	Traction Power lbf(kgf)	Stroke Length inch(mm)	Handle Net Weight lbs(kgs)	Nose Supplied with the Tool	Max. Capacity
ZT4125S	9039(4100)	63/64(25)	3.86(1.75)	Sold Separately	Max. 3/8"(9.5mm) lock bolt

C6L®, MAGNA-GRIP®, MAGNA-LOK® ARE REGISTERED TRADEMARKS OF HOWMET AEROSPACE INC.
MONOBOLT®, AVTAINER®, MAXLOK®, AVDELOK® ARE REGISTERED TRADEMARKS OF STANLEY ENGINEERED FASTENING.

Products and specifications subject to change without prior notice

Clam Shell Composite Housing

Features

- Designed with patented "Module units assembled in composite clam shell housing" for easy tool service.
- Ergonomic texture coated composite housing for operator's comfort.
- Less friction loss along the air passage to increase tool power & performance.
- Module unit mechanism enables more common parts to be used in similar designed tools.
- Rocker type trigger and both left or right hand side air inlet for ease of operational control.

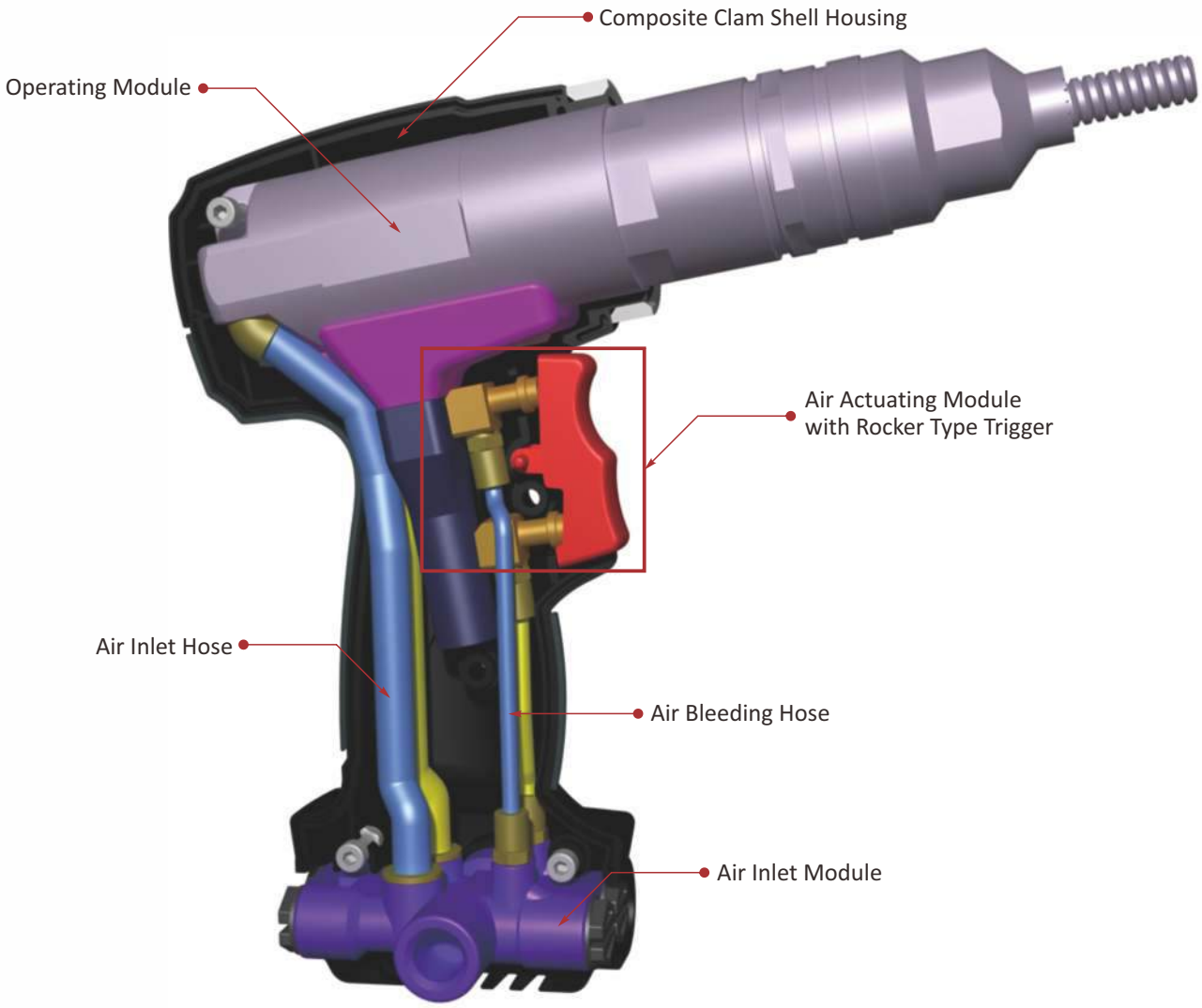

Patent pending in other countries

R.O.C.PAT.:
M306920/174032

P.R.C.PAT.:
ZL 2006 2 0131894.9

U.S.PAT.:
6,149,356

DEUTSCHLAND PAT.:
Nr.20 2007 007 127.2

Spin-Spin type Rivet Nut Installation Tool

Model number with "**Q**" means equipped with Quick Change Head.

ZRN106
ZRN106Q w/Quick Change Head
Composite Air Rivet Nut Tool-M6

Optional Nose Assembly			
Size	B-Type (Screw-On)	Q-Type (Quick Change)	Model for other sizes:
M3	P/N: 103800B	P/N: 103800Q	ZRN103 or ZRN103Q
M4	P/N: 104800B	P/N: 104800Q	ZRN104 or ZRN104Q
M5	P/N: 105800B	P/N: 105800Q	ZRN105 or ZRN105Q
M6	P/N: 106800B	P/N: 106800Q	ZRN106 or ZRN106Q
#6-32	P/N: 632800B	P/N: 632800Q	ZRN163 or ZRN163Q
#8-32	P/N: 832800B	P/N: 832800Q	ZRN183 or ZRN183Q
#10-24	P/N: 124800B	P/N: 124800Q	ZRN124 or ZRN124Q
#10-32	P/N: 132800B	P/N: 132800Q	ZRN132 or ZRN132Q
1/4"-20	P/N: 114800B	P/N: 114800Q	ZRN120 or ZRN120Q

Model number with "**Q**" means equipped with Quick Change Head.

ZRN508
ZRN508Q w/Quick Change Head
Composite Air Rivet Nut Tool-M8

Optional Nose Assembly			
Size	B-Type (Screw-On)	Q-Type (Quick Change)	Model for other sizes:
M6	P/N: 106800B	P/N: 106800Q	ZRN506 or ZRN506Q
M8	P/N: 208800B	P/N: 208800Q	ZRN508 or ZRN508Q
1/4"-20	P/N: 114800B	P/N: 114800Q	ZRN520 or ZRN520Q
5/16"-18	P/N: 516800B	P/N: 516800Q	ZRN518 or ZRN518Q

ZRN210
ZRN212
Composite Air Rivet Nut Tool-M10/M12

Optional Nose Assembly			
Size	B-Type (Screw-On)	Q-Type (Quick Change)	Model for other sizes:
M10	P/N: 210800B	P/N: 210800Q	ZRN210 or ZRN210Q
M12	P/N: 212800B		ZRN212
1/2"-13	P/N: 12C800B		ZRN213
3/8"-16	P/N: 238800B	P/N: 238800Q	ZRN216 or ZRN216Q
3/8"-24	P/N: 38F800B		ZRN224

* There is ONLY one size of rivet head come along with each tool, please specify the model you require when ordering.

Model	Free Speed rpm	Avg. Air Cons. cfm (l/min)	Noise Level db(A)	Vibration m/s^2	Net Weight lbs(kgs)	Min. Hose Size inch(mm)	Air Inlet Size inch-NPT/PT	Max. Rivet Nut Setting Capacity Round Rivet Nut(mm)
ZRN106	1500	20.3 (580)	86	<2.5	3.06(1.39)	3/8(10)	1/4	M6 Round/Steel
ZRN106Q	1500	20.3 (580)	86	<2.5	2.42(1.10)	3/8(10)	1/4	M6 Round/Steel
ZRN508	500	20.3 (580)	86	<2.5	3.08(1.4)	3/8(10)	1/4	M8 Hex./All Materials
ZRN508Q	500	20.3 (580)	86	<2.5	2.50(1.13)	3/8(10)	1/4	M8 Hex./All Materials
ZRN210	280	20.3 (580)	86	<2.5	3.08(1.4)	3/8(10)	1/4	M10 Hex./All Materials
ZRN212	280	20.3 (580)	86	<2.5	3.08(1.4)	3/8(10)	1/4	M12 Round/Steel

Products and specifications subject to change without prior notice

Spin-Spin type Rivet Nut Installation Tool

Features

- Powerful Precise Motor.
- Exclusive Quick Reversible Trigger.
- Handle Exhaust.
- Lightweight.
- Smooth, Direct Driver.

ZRN280 / ZRN500 / ZRN700 0.7HP

Aluminum Housing Air Rivet Nut Tool

ZRN1600 0.7HP

Aluminum Housing Air Rivet Nut Tool

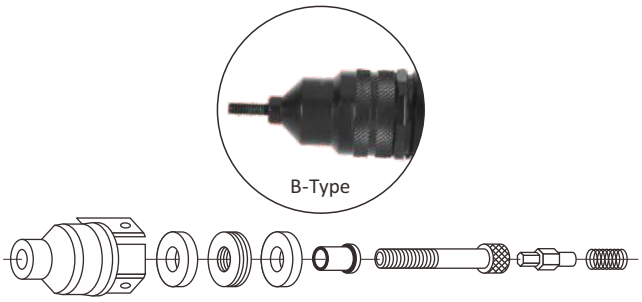

B type Nose Head

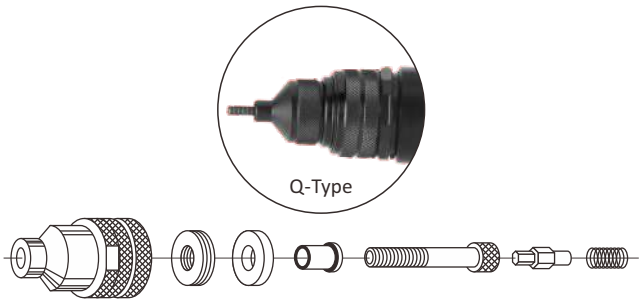

Quick Change type Nose Head

Optional Nose Assembly (Metric System)			Optional Nose Assembly (Imperial System)		
Size	B-Type (Screw-On)	Q-Type (Quick Change)	Size	B-Type (Screw-On)	Q-Type (Quick Change)
M3	P/N: 103800B	P/N: 103800Q	#6-32	P/N: 632800B	P/N: 632800Q
M4	P/N: 104800B	P/N: 104800Q	#8-32	P/N: 832800B	P/N: 832800Q
M5	P/N: 105800B	P/N: 105800Q	#10-24	P/N: 124800B	P/N: 124800Q
M6	P/N: 106800B	P/N: 106800Q	#10-32	P/N: 132800B	P/N: 132800Q
M8	P/N: 208800B	P/N: 208800Q	1/4"-20	P/N: 114800B	P/N: 114800Q
M10	P/N: 210800B	P/N: 210800Q	5/16"-18	P/N: 516800B	P/N: 516800Q
			3/8"-16	P/N: 238800B	P/N: 238800Q

* There is ONLY one size of rivet head come along with each tool, please specify the model you require when ordering.

Model	Free Speed rpm	Avg. Air Cons. cu.ft(l/min)	Noise Level db(A)	Vibration m/s^2	Net Weight lbs(kgs)	Min. Hose Size inch(mm)	Air Inlet Size inch-NPT/PT	Max. Rivet Nut Setting Capacity
ZRN280B ZRN280Q	280	5(141)	86	<2.5	2.87(1.3)	3/8(10)	1/4	M10 Round/Alum.
ZRN500B ZRN500Q	500	5(141)	86	<2.5	2.87(1.3)	3/8(10)	1/4	M6 Hex./All Materials
ZRN700B ZRN700Q	720	5(141)	86	<2.5	2.87(1.3)	3/8(10)	1/4	M5 Round/Alum.
ZRN1600B ZRN1600Q	1700	5(141)	86	<2.5	2.2(1)	3/8(10)	1/4	M4 Round/Steel

Speed Riveter

Features

- Can be used in areas with restricted operator space.
- Available with in-line handle and top or bottom hose configuration - optimized ergonomic performance for improved productivity.
- Average cycle time of less than 2 seconds - increased productivity - up to 1500 fasteners per hour.
- High capacity, magazine fed fasteners - reduced component handling and subsequent spillage.
- Lightweight construction and zero action recoil - reduced operator fatigue.
- Long life, self-priming intensifier - consistent actuation and hence joint formation.
- Long reach barrel - can be used in many difficult access applications.
- Low maintenance hand tool - productive time is maximized - no requirement for specialist maintenance training.
- Robust & durable construction - suitable for most industrial environments.
- Parts interchangeable with Avdel® 07530-02100.

ZT0430
Speed Riveter

This tool is designed for Speed Rivet as Shown on the tables below.						
	2.4mm	3.0mm	3.2mm	3.5mm	4.0mm	4.8mm
Speed Rivet	Aluminum, Brass	N/A	N/A	Aluminum, Steel Brass, Stainless	Aluminum, Steel Brass, Stainless	Aluminum, Steel Brass, Stainless
Speed Chovet	Aluminum, Brass	N/A	N/A	Aluminum, Steel	Aluminum, Steel	Aluminum, Steel
Speed Screw	N/A	Steel	Steel	N/A	N/A	N/A

Model	Pull Force lbf(kgf)	Stroke Length inch(mm)	Cycle Time Approximately	Noise Level db(A)	Vibration m/s^2	Net Weight lbs(kgs)	Free Air Volume Required bar(liters)	Air Supply Pressure Minimum/Maximum bar
ZT0430	874(389)	1-3/16(30)	1 second	70	<2.7	2.38(1.08)	5.1(2.6)	5~7

- Overall Length 475mm
- Intensification Ratio: 30:1

Products and specifications subject to change without prior notice

Speed Riveter - Front Jaws

Features

- Our speed rivet has a Bulbed tail. And it is foreshortened and expanded radially during installation.
- Because this bulbed tail will give you high vibration and good hole fill.
- We supply the speed rivet with many different material and finishes.
- So you will have various options according to your needs.
- Speed rivets are podded in a paper pod. So you can install 20 to 70 rivets with one easy loading.

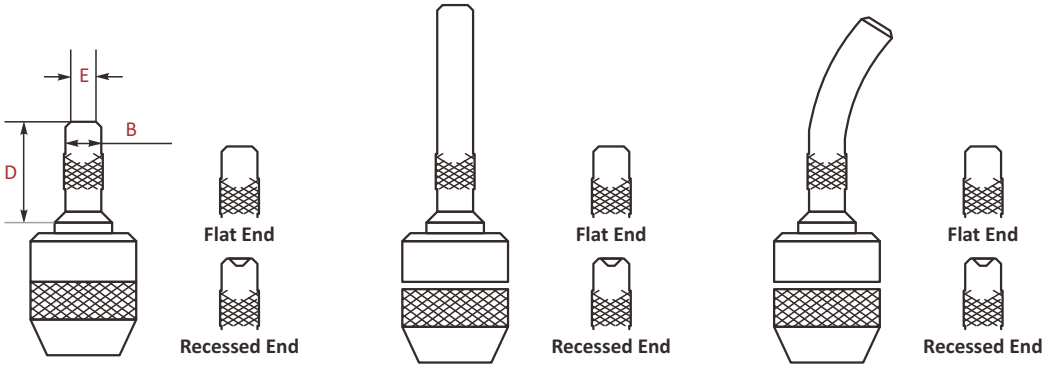

Rivet size	Item#	Size & End form	Dimensions(mm)			M/F Spring
			B	D	E	
2.4	ZNJ-3001	Standard Flat	9.5	33	3.4	Standard
	ZNJ-3002	Standard Recessed	9.5	33	3.4	
3.2	ZNJ-4001	Standard Flat	11.5	30.3	5.5	Standard
	ZNJ-4002	Standard Recessed	11.5	30.3	8.5	
	ZNJ-4003	Long Flat	9.6	59.5	5.5	Long
	ZNJ-4004	Long Recessed	9.6	59.5	8.5	
	ZNJ-4005	Long Curved Flat	9.6	59.5	5.5	
	ZNJ-4006	Long Curved Recessed	9.6	59.5	8.5	
4.0	ZNJ-5001	Standard Flat	12.5	30.3	7.0	Standard
	ZNJ-5002	Standard Recessed	12.5	30.3	10.5	
	ZNJ-5003	Long Flat	12.5	59.5	7.0	Long
	ZNJ-5004	Long Recessed	12.5	59.5	10.5	
	ZNJ-5005	Long Curved Flat	12.5	59.5	7.0	
	ZNJ-5006	Long Curved Recessed	12.5	59.5	10.5	
4.8	ZNJ-6001	Standard Flat	14.5	30.3	10.0	Standard
	ZNJ-6002	Standard Recessed	14.5	30.3	12.5	
	ZNJ-6003	Long Flat	14.5	60.5	10.0	Long
	ZNJ-6004	Long Recessed	14.5	60.5	12.5	
	ZNJ-6005	Long Curved Flat	14.5	60.5	10.0	
	ZNJ-6006	Long Curved Recessed	14.5	60.5	12.5	

Speed Riveter - Mandrels

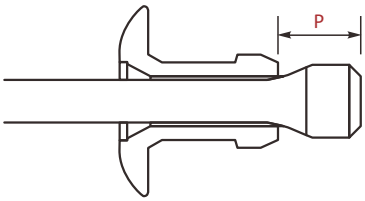

SPEED RIVET

SPEED CHOVET

MANDRELS FOR SPEED RIVET					
Rivet size	**Hole size**	**Mandrel Item#**	**Mandrel size**	**P**	**M.F Spring #**
2.4mm(3/32inch) Aluminum, Brass	2.4(As recommended)	ZM-0183	1.83	3.02	ZS-3001
	2.4+0.1	ZM-0193	1.93	3.12	
	2.4+0.2	ZM-0201	2.01	3.20	
3.2mm(1/8inch) Aluminum, Steel, Brass	3.3(As recommended)	ZM-0234	2.34	3.05	ZS-4001
	3.3+0.13	ZM-0246	2.46	3.20	
	3.3+0.25	ZM-0259	2.59	3.38	
4.0mm(5/32inch) Aluminum, Steel, Brass	4.05(As recommended)	ZM-0279	2.79	3.45	ZS-5001
	4.05+0.13	ZM-0292	2.92	3.61	
	4.05+0.25	ZM-0305	3.05	3.78	
4.8mm(3/16inch) Aluminum, Steel, Brass	4.89(As recommended)	ZM-0358	3.58	3.99	ZS-6001
	4.89+0.13	ZM-0371	3.71	4.17	
	4.89+0.25	ZM-0384	3.84	4.32	
3.2mm(1/8inch) Stainless, Steel	3.3(As recommended)	ZM-S249	2.49	2.95	ZS-4001
	3.3+0.13	ZM-S262	2.62	3.10	
4.0mm(5/32inch) Stainless, Steel	4.05(As recommended)	ZM-S305	3.05	3.20	ZS-5001
	4.05+0.13	ZM-S318	3.18	3.35	
4.8mm(3/16inch) Stainless, Steel	4.89(As recommended)	ZM-S389	3.89	3.81	ZS-6001
	4.89+0.13	ZM-S401	4.01	3.96	
MANDRELS FOR SPEED CHOVET					
2.4mm(3/32inch) Aluminum, Brass	2.4(As recommended)	ZCM-0184	1.84	5.00	ZS-3001
	2.4+0.04	ZCM-0188	1.88	5.00	
	2.4+0.09	ZCM-0193	1.93	5.00	
3.2mm(1/8inch) Aluminum, Steel, Brass	3.3(As recommended)	ZCM-00234	2.34	7.11	ZS-4001
	3.3+0.13	ZCM-00249	2.49	7.11	
	3.3+0.25	ZCM-0259	2.59	7.11	
4.0mm(5/32inch) Aluminum, Steel, Brass	4.05(As recommended)	ZCM-0272	2.72	8.20	ZS-5001
	4.05+0.13	ZCM-0292	2.92	8.20	
	4.05+0.25	ZCM-0310	3.10	8.20	
4.8mm(3/16inch) Aluminum, Steel, Brass	4.89(As recommended)	ZCM-0335	3.35	9.90	ZS-6001
	4.89+0.13	ZCM-0371	3.71	9.30	
	4.89+0.25	ZCM-0396	3.96	9.30	

Depend on the hole size and material of application, you can select suitable mandrel for your application.
For the curved front jaws, the mandrels have to be bent by habd to match the curvature of the front jaws.
Mandrels for stainless steel speed rivet, they have a "V" cut on the end of the mandrel heads.

Products and specifications subject to change without prior notice

Installation Tool Selection Chart

Blind Rivet Installation Tool

Model	Diameter						
	3/32 (2.4)	1/8 (3.2)	5/32 (4.0)	3/16 (4.8)	1/4 (6.4)	5/16 (7.8)	3/8 (9.5)
ZT0318VS	ST/ST	ST/ST	AL/S				
ZT0618T	ST/ST	ST/ST	ST/ST	S/S			
ZT0618VS	ST/ST	ST/ST	ST/ST	S/S			
ZT0918T	ST/ST	ST/ST	ST/ST	ST/ST			
ZT0918VS	ST/ST	ST/ST	ST/ST	ST/ST			
ZT0918L	ST/ST	ST/ST	ST/ST	ST/ST			
ZT0918LV	ST/ST	ST/ST	ST/ST	ST/ST			
ZT1214VS-5			ST/ST	ST/ST			
ZT1214VS-6				ST/ST	S/S		
ZT1214T			ST/ST	ST/ST	S/S		
ZT1214L			ST/ST	ST/ST	S/S		
ZT1214LV			ST/ST	ST/ST	S/S		
ZT1819T				ST/ST	ST/ST		
ZT1819VS				ST/ST	ST/ST		
ZT1819L				ST/ST	ST/ST		
ZT1819LV				ST/ST	ST/ST		
ZT1017VSN-5			ST/ST	ST/ST			
ZT1017VSN-6				ST/ST	AL/S		
ZT0919VS	ST/ST	ST/ST	ST/ST	ST/ST			
ZT1821VS				ST/ST	ST/ST		
ZT0520	ST/ST	ST/ST	ST/ST				
ZT0715	ST/ST	ST/ST	ST/ST	S/S			
ZT0922	ST/ST	ST/ST	ST/ST	ST/ST			
ZT1218			ST/ST	ST/ST	S/S		
ZT1528				ST/ST	ST/ST		
ZT1725				ST/ST	ST/ST		
ZT2021				ST/ST	ST/ST		
ZT2318				ST/ST	ST/ST		
ZT2021-8						ST/ST	
ZT2318-8						ST/ST	

Model	Diameter						
	3/32 (2.4)	1/8 (3.2)	5/32 (4.0)	3/16 (4.8)	1/4 (6.4)	5/16 (7.8)	3/8 (9.5)
ZAR0921	ST/ST	ST/ST	ST/ST	S/S			
ZAR0921V	ST/ST	ST/ST	ST/ST	S/S			
ZAR0818	ST/ST	ST/ST	ST/ST	S/S			
ZAR0818V	ST/ST	ST/ST	ST/ST	S/S			
ZIR0922			ST/ST	ST/ST	ST/ST		
ZT0616	ST/ST	ST/ST	ST/ST				
ZT0616V	ST/ST	ST/ST	ST/ST				
ZPR1016T	ST/ST	ST/ST	ST/ST	S/S			
ZPR1116T-3J	ST/ST	ST/ST	ST/ST	ST/ST	ST/ST		
ZT1918T	ST/ST	ST/ST	ST/ST	ST/ST	ST/ST		
ZRG510	ST/ST	ST/ST	ST/ST	AL/S			
ZRG540	ST/ST	ST/ST	ST/ST	ST/ST	AL/S		
ZT-1020	ST/ST	ST/ST	ST/ST	ST/ST	AL/S		
ZT-1020V	ST/ST	ST/ST	ST/ST	ST/ST	AL/S		
ZRA-48	ST/ST	ST/ST	ST/ST	S/S			
ZARA-48	ST/ST	ST/ST	ST/ST	S/S			
ZRA-64		ST/ST	ST/ST	ST/ST	S/S		
ZT0518S	ST/ST	ST/ST	ST/ST				
ZT0920S			ST/ST	ST/ST			
ZT1626S				ST/ST	ST/ST		
ZT2420-8S				ST/ST	ST/ST	ST/ST	
ZT3213						ST/ST	ST/ST
ZT4125S						ST/ST	ST/ST
ZT0430	Alum.	Stainless Steel	Stainless Steel	Stainless Steel			

AL/AL= Aluminum head / Aluminum mandrel
AL/S= Aluminum head / Steel mandrel
S/S= Steel head / Steel mandrel
S/ST= Steel head / Stainless Steel mandrel
ST/ST= Stainless Steel head / Stainless Steel mandrel

Lock Bolt Installation Tool

Model	Material Lock Bolt	Diameter			
		3/16 (4.8)	1/4 (6.4)	5/16 (7.8)	3/8 (9.5)
ZT2420HSN	aluminum	★	★		
	steel	★	★		
	stainless	★			
ZT2420HS	aluminum	★	★		
	steel	★	★		
	stainless	★			
ZT2420HSK	aluminum	★	★		
	steel	★	★		
	stainless	★			
ZT2318-HA	aluminum	★	★		
	steel	★	★		
	stainless	★			
ZT2318H	aluminum	★	★		
	steel	★	★		
	stainless	★			
ZT2318HK	aluminum	★	★		
	steel	★	★		
	stainless	★			
ZT3213	aluminum			★	★
	steel			★	★
	stainless			★	
ZT4125S	aluminum			★	★
	steel			★	★
	stainless			★	★

Blind Bolt Installation Tool

Model	Material Blind Bolt	Diameter			
		3/16 (4.8)	1/4 (6.4)	5/16 (7.8)	3/8 (9.5)
ZT2318B	steel		★		

Rivet Stud Installation Tool

Model	Material Rivet Stud	Diameter						
		M3	M4	M5	M6	M8	M10	M12
ZRS1606M	aluminum			⬢	⬢	⬢	⬢	
	steel		⬢	⬢	⬢	⬢	●*	
	stainless		⬢	⬢	⬢	⬢	●*	
ZRS2508M	aluminum		⬢	⬢	⬢	⬢	⬢	
	steel		⬢	⬢	⬢	⬢	⬢	
	stainless		⬢	⬢	⬢	⬢	⬢	

Model	Material Rivet Stud	#8 -32	#10 -24	#10 -32	1/4" -20	5/16" -18	3/8" -16	1/2" -13
ZRS1606E	aluminum		⬢	⬢	⬢	⬢	⬢	
	steel		⬢	⬢	⬢	⬢	●*	
	stainless		⬢	⬢	⬢	⬢	●*	
ZRS2508E	aluminum		⬢	⬢	⬢	⬢	⬢	
	steel		⬢	⬢	⬢	⬢	⬢	
	stainless		⬢	⬢	⬢	⬢	⬢	

● = Round
⬢ = Hex.
* = need to increase pressure to 100psi

Installation Tool Selection Chart

Rivet Nuts Installation Tool

Model	Material / Rivet Nut	Diameter						
		M3	M4	M5	M6	M8	M10	M12
ZRN1606M	aluminum	▲	⬢	⬢	⬢	⬢	⬢	⬢*
	steel	▲	⬢	⬢	⬢	⬢	⬢	⬢*
	stainless	▲	⬢	⬢	⬢	⬢	⬢	●*
ZRN2508M	aluminum	▲	⬢	⬢	⬢	⬢	⬢	⬢
	steel	▲	⬢	⬢	⬢	⬢	⬢	⬢
	stainless	▲	⬢	⬢	⬢	⬢	⬢	⬢
ZRN1811MS	aluminum	▲	⬢	⬢	⬢	⬢	⬢	⬢*
	steel	▲	⬢	⬢	⬢	⬢	⬢	⬢*
	stainless	▲	⬢	⬢	⬢	⬢	⬢	●*
ZRN1XX	aluminum	⬢	⬢	⬢	⬢			
	steel	⬢	⬢	⬢	●			
	stainless	⬢	⬢	⬢				
ZRN5XX	aluminum				⬢	⬢		
	steel				⬢	⬢		
	stainless				⬢	⬢		
ZRN2XX	aluminum						⬢	⬢
	steel						⬢	●
	stainless						⬢	●

Model	Material / Rivet Nut	Diameter						
		M3	M4	M5	M6	M8	M10	M12
ZRN280	aluminum					⬢	●	
	steel					⬢		
	stainless							
ZRN500	aluminum		⬢	⬢	⬢			
	steel		⬢	⬢	⬢			
	stainless		⬢	⬢	⬢			
ZRN700	aluminum		⬢	●				
	steel		⬢					
	stainless		⬢					
ZRNA-410D	aluminum	⬢	⬢					
	steel	⬢	●					
	stainless	⬢						
ZRN1600	aluminum		⬢	⬢	⬢	⬢	●	
	steel		⬢	⬢	⬢	⬢		
	stainless		⬢	⬢	⬢	⬢		
ZRN1907M	aluminum		⬢	⬢	⬢	⬢	●	
	steel		⬢	⬢	⬢	⬢		
	stainless		⬢	⬢	⬢	⬢		

Model	Material / Rivet Nut	Diameter									
		#6-32	#8-32	#10-24	#10-32	1/4"-20	5/16"-18	3/8"-16	3/8"-24	1/2"-13	1/2"-20
ZRN1606E	aluminum	▲	⬢	⬢	⬢	⬢	⬢	⬢	⬢	⬢*	⬢*
	steel	▲	⬢	⬢	⬢	⬢	⬢	⬢	⬢	⬢*	⬢*
	stainless	▲	⬢	⬢	⬢	⬢	⬢	⬢	⬢	●*	●*
ZRN2508E	aluminum	▲	⬢	⬢	⬢	⬢	⬢	⬢	⬢	⬢	⬢
	steel	▲	⬢	⬢	⬢	⬢	⬢	⬢	⬢	⬢	⬢
	stainless	▲	⬢	⬢	⬢	⬢	⬢	⬢	⬢	⬢	⬢
ZRN1811ES	aluminum	▲	⬢	⬢	⬢	⬢	⬢	⬢	⬢	⬢*	⬢*
	steel	▲	⬢	⬢	⬢	⬢	⬢	⬢	⬢	⬢*	⬢*
	stainless	▲	⬢	⬢	⬢	⬢	⬢	⬢	⬢	●*	●*
ZRN1XX	aluminum	⬢	⬢	⬢	⬢	⬢					
	steel	⬢	⬢	⬢	⬢	●					
	stainless	⬢	⬢	⬢	⬢						
ZRN5XX	aluminum					⬢	⬢				
	steel					⬢	⬢				
	stainless					⬢	⬢				
ZRN2XX	aluminum							⬢	⬢	⬢	⬢
	steel							⬢	⬢	●	●
	stainless							⬢	⬢	●	●
ZRN280	aluminum						⬢	●	●		
	steel						⬢				
	stainless										
ZRN500	aluminum			⬢	⬢	⬢					
	steel			⬢	⬢	⬢					
	stainless			⬢	⬢	⬢					
ZRN700	aluminum		⬢	●	●						
	steel		⬢								
	stainless		⬢								
ZRNA-410DE	aluminum	⬢	⬢								
	steel	⬢	●								
	stainless	⬢									
ZRN1600	aluminum		⬢	⬢	⬢	⬢	⬢	●			
	steel		⬢	⬢	⬢	⬢	⬢				
	stainless		⬢	⬢	⬢	⬢	⬢				
ZRN1970E	aluminum		⬢	⬢	⬢	⬢	⬢	●			
	steel		⬢	⬢	⬢	⬢	⬢				
	stainless		⬢	⬢	⬢	⬢	⬢				

● = Round
⬢ = Hex.
▲ = Optional
* = need to increase pressure to 100psi

Products and specifications subject to change without prior notice

"C" Yoke Riveters

Features

- Specially designed for airplane construction to ensure fast, economical riveting where two-man operation is impractical.
- Features strong, steady, silent squeeze action, which is easily controlled for a large variety of rivets.
- Ideal for dimpling, punching, stamping and pressing. Widely used for truck, bus and automotive applications.
- Extra powerful, portable tandem cylinder also available with double the compressive force for larger riveting capacity.

ZCR030

ZCR060

Model	Rivet Capacity Diameter		Standard Yoke Dimensions		Max Force lb(kN)	Set Holder		Overall Length inch(mm)	Weight With Yoke lbs(kgs)
	Alum	Steel	Reach	Gap		Max Travel	Stroke at Max Power		
ZCR030	1/8(3.2)	3/32(2.4)	1-1/2(38.1)	11/16(17.45)	3000(13.35)	9/16(14.27)	0.05(1.3)	10-1/4(260.35)	4.5(2.04)
ZCR060	3/16(4.8)	5/32(4)	1-1/2(38.1)	11/16(17.45)	6000(26.7)	9/16(14.27)	0.05(1.3)	14(355.6)	5.4(2.49)

Note: Please specify the model no. With CXX you may require while ordering.

CP214 Compatible Yoke

Applications

C030C15

C030C30

C030C40

C030L25 (Longeron Yoke)

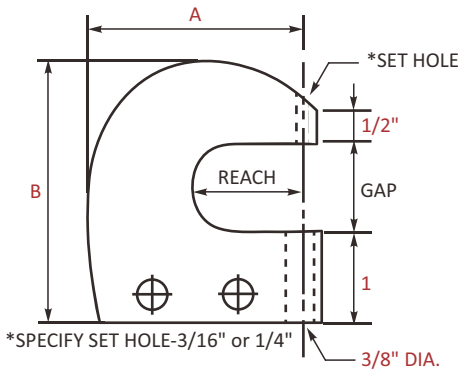

Model	Reach inch(mm)	Gap inch(mm)	A inch(mm)	B inch(mm)
C030C15	1.5(38.1)	1.33(33.8)	2.98(75.6)	3.38(86)
C030C30	3(76.2)	1.33(33.8)	4.43(112.6)	3.29(83.6)
C030C40	4(101.6)	1.33(33.8)	5.89(149.5)	3.76(95.4)
C030L25	2.5(63.5)	1.33(33.8)	3.66(93)	3.98(101)

"Alligator" Yoke Riveters

Features

- For squeezing a large variety of size and type of rivets.
- Strong squeeze action is easily controlled to provide uniformity and accuracy of work.
- Ideally used for dimpling, punching and pressing.
- Extra powerful, portable tandem cylinder also available with double the compressive force for large riveting capacity.

ZCR030A15 Single Cylinder

ZCR060A15 Tandem Cylinder

ZCR030A225 Single Cylinder

ZCR060A225 Tandem Cylinder

ZCR030A30 Single Cylinder

ZCR060A30 Tandem Cylinder

Model	Rivet Capacity Diameter		Standard Yoke Dimensions Reach	Max Force lb(kN)	Set Holder		Overall Length inch(mm)	Weight With Yoke lbs(kgs)
	Alum	Steel			Max Travel	Stroke at Max Power		
ZCR030A15	1/8(3.2)	3/32(2.4)	1-1/2(38.1)	3000(13.35)	5/8(15.9)	0.05(1.3)	9-3/16(230)	3.75(1.7)
ZCR030A225	3/32(2.4)	1/16(1.6)	2-1/4(57.1)	2200(9.79)	7/8(22.2)	0.094(2.4)	10-1/4(260)	4.25(1.9)
ZCR030A30	3/32(2.4)	1/16(1.6)	3(76.2)	1800(8)	1-1/4(31.8)	0.05(1.3)	10-3/4(270)	4.5(2.1)
ZCR060A15	3/16(4.8)	5/32(4)	1-1/2(38.1)	6000(26.7)	5/8(15.9)	0.05(1.3)	11-3/16(280)	4.75(2.2)
ZCR060A225	5/32(4.0)	1/8(3.2)	2-1/4(57.1)	4300(19.1)	7/8(22.2)	0.094(2.4)	12-29/32(328)	5.25(2.4)
ZCR060A30	1/8(3.2)	3/32(2.4)	3(76.2)	3400(15.1)	1-1/4(31.8)	0.05(1.3)	13-1/2(340)	5.5(2.5)

A15

A225

A30

Model	Reach inch(mm)	Gap inch(mm)	Closed Height inch(mm)
A15	1.5(38.1)	0.89(22.6)	0.875(22.2)
A225	2.25(57.2)	0.89(22.6)	0.875(22.2)
A30	3(76.2)	0.89(22.6)	0.875(22.2)

Products and specifications subject to change without prior notice

MADE IN USA

Pneudraulic C -Yoke & Alligator Squeezers

Features

- High quality industrial grade compression rivet squeezers, for the installation of solid rivets.
- Compact size and lighter in weight compare to current pneumatic squeezers on the market.
- CONSTANT FORCE over the entire stroke range.
- Built from high quality aircraft grade materials and features held to close tolerances, for years of dependable operation.
- The reduction in weight and constant force decreases operator fatigue, and improves the quality of every riveting work.

Commercial users of these Squeezers include:

AIRBUS
ALCOA
BARNES AEROSPACE
BEECHCRAFT
BOEING AIRCRAFT
CANADA NATIONAL DEFENCE
DELTA AIRLINES
GE AIRCRAFT ENGINES
HONDA AIRCRAFT
KOREAN AEROSPACE
LODE KING INDUSTRIES
MUSCO SPORTS LIGHTING
NORTHROP GRUMMAN
ORENDA AEROSPACE
ROLLS ROYCE - UK
ROLLS ROYCE - US
SCHILLING ROBOTICS
SPIRIT AEROSYSTEMS
UTC AEROSPACE SYSTEMS
U.S. ARMY
U.S AIR FORCE
Evergreen Aviation Precision Corp. (EGAP)

MADE IN USA

Pneudraulic C -Yoke Squeezers

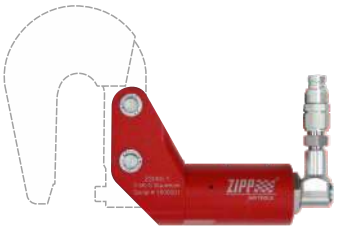

Z3500C
3.5K FORCE

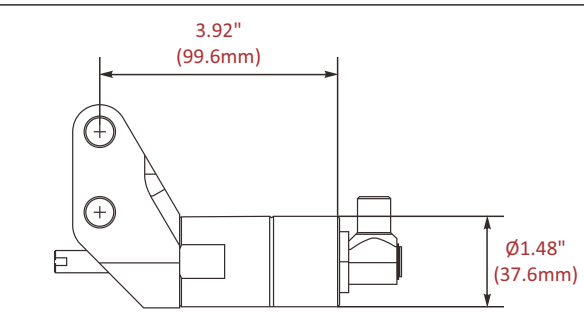

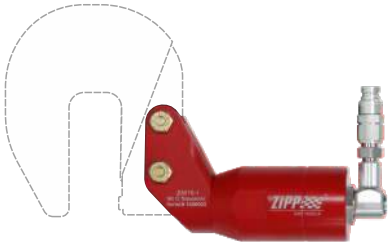

Z6000C
6K FORCE

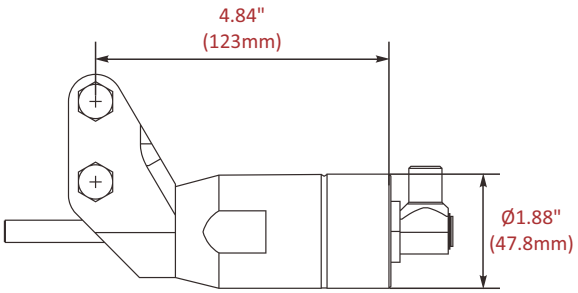

Z9000C
9K FORCE

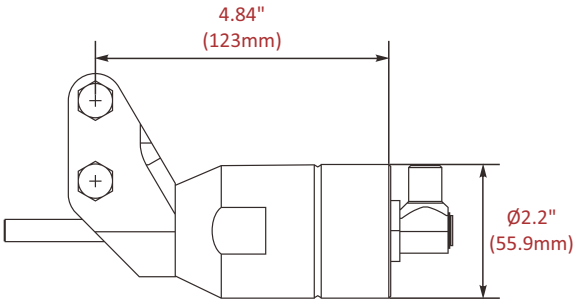

ZIPP squeezer is 50% smaller
ZIPP squeezer is 50% lighter
ZIPP squeezer is quieter in operation

Model	Rivet Capacity Diameter		Fluid Disp Required in³ (cc)	Force At Normal Hyd Pressure lbf(kN)	Hydraulic Pressure		Rivet Set (compression Pin) Travel inch(mm)	Weight (w/o Yoke) lbs(kgs)
	Alum	Steel			Normal psi(MPa)	MAX psi(MPa)		
Z3500C	5/32(4)	1/8(3.2)	0.55(9)	3480(15.5)	3500(24.1)	4500(31)	0.55(14)	1.25(0.56)
Z6000C	3/16(4.8)	5/32(4)	0.97(15.9)	6185(27.5)	3500(24.1)	4500(31)	0.55(14)	1.72(0.78)
Z9000C	1/4(6.4)	3/16(4.8)	0.32(21.6)	8420(37.4)	3500(24.1)	4500(31)	0.55(14)	2.6(1.17)

- All C-Squeezers accept industry standard CP-214 yokes.
- All Squeezers accept rivet dies with 3/16(0.187") shanks.

Model Nomenclature when ordering the complete C yoke Squeezer System:

3500C = 3.5K FORCE
6000C = 6K FORCE
9000C = 9K FORCE

T = Finger Control
F = Guarded Foot Pedal Control

Z 3500C K T — C

K = The system includes Alligator Squeezer, Intensifier, 3m Hyd. Hose set, Hyd. Quick Couplers & Foot or Finger control module.
* All the C yokes are sold separately *

C = Intensifier on Transport Cart

Finger Control for C Squeezers:
P/N 52407 for 9K Squeezer
P/N 52406 for 6K Squeezer
P/N 52405 for 3K Squeezer

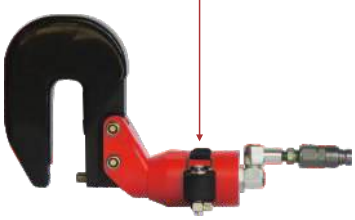

Products and specifications subject to change without prior notice

CP214 Compatible Yoke

C030C08

C030C09

C030C13

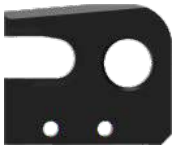

C030C14

C030C15

C030C30

C030C40

C030L25

Z3028-1

Z3028-2

Z3028-3

Z3028-4

Z3028-5

Z3028-6

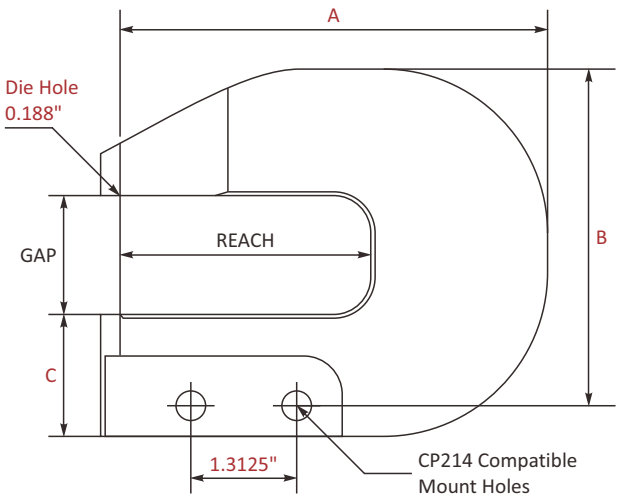

Model	Reach	Gap	"A"	"B"	"C"	Thickness
C030C08	0.78"	1.1"	2.72"	2.16"	1.12"	0.57"
C030C09	0.9"	1.02"	3.27"	2.69"	1.12"	0.75"
C030C13	1.33"	1.41"	2.72"	2.87"	1.4"	0.57"
C030C14	1.4"	1.02"	3.73"	3.02"	1.4"	0.75"
C030C15	1.5"	1.25"	2.98"	3.39"	1.12"	0.57"
C030C30	3"	1.25"	4.44"	3.29"	1.12"	0.57"
C030C40	4"	1.25"	5.89"	3.76"	1.12"	0.83"
C030L25	2.5"	1.25"	3.67"	3.98"	1.12"	0.57"
Z3028-1	1.32"	1.5"	3.23"	3.72"	1.4"	1"
Z3028-2	2.07"	1.5"	4.23"	4.22"	1.4"	1"
Z3028-3	3.07"	1.5"	5.23"	4.22"	1.4"	1"
Z3028-4	4.07"	1.5"	6.35"	4.22"	1.4"	1"
Z3028-5	1.49"	1.92"	3.46"	5.68"	1.12"	1.18"
Z3028-6	3.53"	3.93"	6.77"	7.09"	1.5"	1.38"

*Please confirm the dimension of die holder when ordering.

MADE IN USA

Pneudraulic Alligator Squeezers

Z5000A
10" Alligator Squeezer

Z7000A
8" Alligator Squeezer

Z9000A
6" Alligator Squeezer

ZIPP squeezer is 50% smaller
ZIPP squeezer is 50% lighter
ZIPP squeezer is quieter in operation

Model	Rivet Capacity Diameter		Force lbf(kN)	Reach inch(mm)	Jaw Tip Gap closed inch(mm)	Jaw Tip Gap open inch(mm)	Jaw Tip Gap extended inch(mm)	Net Weight lbs(kgs)
	Alum	Steel						
Z9000A	1/4(6.4)	3/16(4.8)	10100(44.9)	6(152.4)	1.38(35.1)	2.05(52.1)	2.81(71.4)	13.8(6.26)
Z7000A	1/4(6.4)	3/16(4.8)	7862(34.9)	8(203.2)	1.38(35.1)	2.25(57.2)	3.23(82)	15.7(7.12)
Z5000A	3/16(4.8)	5/32(4)	6416(28.5)	10(254)	1.38(35.1)	2.45(62.2)	3.65(92.7)	18.3(8.3)

- Alligator tip gaps are without dies installed.
- All Squeezers accept rivet dies with 3/16(0.187") shanks.

Model Nomenclature when ordering the complete Alligator Squeezer System:

5000A = 10" Alligator Squeezer
7000A = 8" Alligator Squeezer
9000A = 6" Alligator Squeezer

T = Finger Control
F = Guarded Foot Pedal Control

Z 5000A K T — C

K = The system includes Alligator Squeezer, Intensifier, 3m Hyd. Hose set, Hyd. Quick Couplers & Foot or Finger control module.

C = Intensifier on Transport Cart

P/N 52407A
Finger Control for Alligator Squeezers

Products and specifications subject to change without prior notice

Pneudraulic Intensifiers

Features

- The ZIPP Pneudraulic Intensifier is designed to operate devices requiring a small volumetric output of high pressure fluid. The unit is a "one shot" intensifier, meaning it will fully displace the hydraulic fluid with one stroke of the air piston in the cylinder. These types of intensifiers tend to be faster than pumping type air operated intensifiers of similar size. These models also allows for "feathering" of the riveter (subtle positioning of the squeezer rivet set), when controlled by a foot or finger operated valve.
- Optional electrical module. upgrade are available upon request.
- Portable intensifier instead of high cost hydraulic power unit.
- Low operating hydraulic pressure design for more durable hydraulic sealing mechanism.
- Custom design are welcome.
- Before using these Intensifier, please fully read and understand the operation manual.

ZPI-11016T
Trigger type, Pneudraulic Intensifier - 16cc
ZPI-11016F
Foot Pedal type, Pneudraulic Intensifier - 16cc

ZPI-15047
Pneudraulic Intensifier
-47cc

ZPI-12063T
Trigger type,
Pneudraulic Intensifier - 63cc
ZPI-12063F
Foot Pedal type,
Pneudraulic Intensifier - 63cc

NEW PRODUCT

ZPI-12063TC
ZPI-12063FC
Pneudraulic Intensifier
Cart-63cc

Model	Max. Inlet Air Pressure psi(kg/cm²)	Max. Output Hydraulic Pressure psi(kg/cm²)	Delivered Hyd. Fluid Volume CC	Suitable For
ZPI-11016T ZPI-11016F	90(6.3)	5062(354)	16	Z3500C
ZPI-12063T ZPI-12063F	90(6.3)	4978(350)	63	Z6000C, Z9000C & All Alligator Squeezers
ZPI-12063TC ZPI-12063FC	90(6.3)	4978(350)	63	Z6000C, Z9000C & All Alligator Squeezers
ZPI-15047	90(6.3)	4267(300)	47	3/8" Split type Pneudraulic Installation Tools

DIMPLE PUNCH & DIE SET

					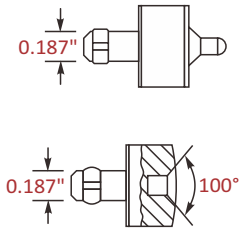
RS426-3	RS426-4	RS426-5	RS509-4	RS509-5	
3/32"	1/8"	5/32"	#6	#8	

ROUND HEAD

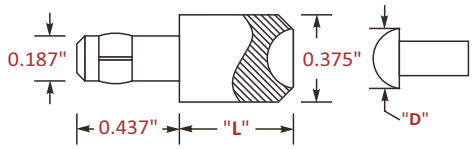

RS-1000

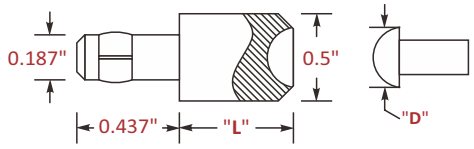

RS-2000/RS-2100

Rivet Head Diameter							
RS-1000		RS-2000		RS-2100			
"D" 0.187"(4.75mm)		"D" 0.250"(6.35mm)		"D" 0.219"(5.57mm)		"D" 0.273"(6.94mm)	
NO.	L	NO.	L	NO.	L	NO.	L
-1X	1/8(3.2mm)	-8X	1/8(3.2mm)	-01X	1/8(3.2mm)	-01XA	1/8(3.2mm)
-1	1/4(6.4mm)	-8	1/4(6.4mm)	-01	1/4(6.4mm)		
-2	3/8(9.5mm)	-9	3/8(9.5mm)	-02	3/8(9.5mm)		
-3	1/2(12.7mm)	-10	1/2(12.7mm)	-03	1/2(12.7mm)		
		-11	5/8(15.9mm)				
		-12	3/4(19mm)				

BRAZIER HEAD

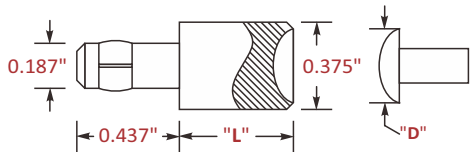

RS-1001

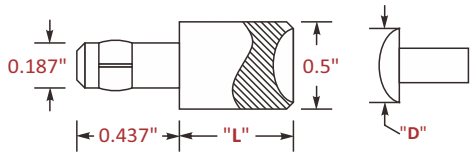

RS-2001

Rivet Head Diameter					
RS-1001		RS-2001			
"D" 0.312"(7.93mm)		"D" 0.312"(7.93mm)		"D" 0.391"(9.94mm)	
NO.	L	NO.	L	NO.	L
-8X	1/8(3.2mm)	-8X	1/8(3.2mm)	-15X	1/8(3.2mm)
-8	1/4(6.4mm)	-8	1/4(6.4mm)	-15	1/4(6.4mm)
-9	3/8(9.5mm)	-9	3/8(9.5mm)	-16	3/8(9.5mm)
-10	1/2(12.7mm)	-10	1/2(12.7mm)	-17	1/2(12.7mm)
-11	5/8(15.9mm)	-11	5/8(15.9mm)		
-12	3/4(19mm)	-12	3/4(19mm)		
-13	7/8(22.2mm)	-14	1(25.4mm)		
-14	1(25.4mm)				

UNIVERSAL HEAD

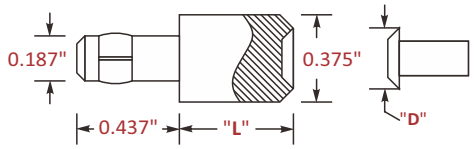

RS-1002

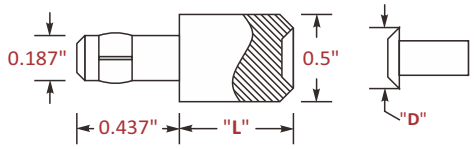

RS-2002

Rivet Head Diameter									
RS-1002				RS-2002					
"D" 0.187"(4.75mm)		"D" 0.25"(6.35mm)		"D" 0.187"(4.75mm)		"D" 0.25"(6.35mm)		"D" 0.312"(7.93mm)	
NO.	L	NO.	L	NO.	L	NO.	L	NO.	L
-1X	1/8(3.2mm)	-8X	1/8(3.2mm)	-1X	1/8(3.2mm)	-8X	1/8(3.2mm)	-15X	1/8(3.2mm)
-1	1/4(6.4mm)	-8	1/4(6.4mm)	-1	1/4(6.4mm)	-8	1/4(6.4mm)	-15	1/4(6.4mm)
-2	3/8(9.5mm)	-9	3/8(9.5mm)	-2	3/8(9.5mm)	-9	3/8(9.5mm)	-16	3/8(9.5mm)
-3	1/2(12.7mm)	-10	1/2(12.7mm)	-3	1/2(12.7mm)	-10	1/2(12.7mm)	-17	1/2(12.7mm)
-4	5/8(15.9mm)	-11	5/8(15.9mm)	-4	5/8(15.9mm)	-11	5/8(15.9mm)	-18	5/8(15.9mm)
-5	3/4(19mm)	-12	3/4(19mm)	-5	3/4(19mm)	-12	3/4(19mm)	-19	3/4(19mm)
-6	7/8(22.2mm)	-13	7/8(22.2mm)	-6	7/8(22.2mm)	-13	7/8(22.2mm)	-20	7/8(22.2mm)
-7	1(25.4mm)			-7	1(25.4mm)	-14	1(25.4mm)	-21	1(25.4mm)

Products and specifications subject to change without prior notice

FLUSH STYLE

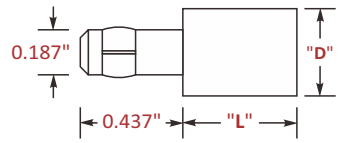

Rivet Head Diameter			
RS-2003			
"D" 0.5"(12.7mm)			
NO.	L	NO.	L
-16	1/8(3.2mm)	-24	5/8(15.9mm)
-18	1/4(6.4mm)	-26	3/4(19mm)
-20	3/8(9.5mm)	-28	7/8(22.2mm)
-22	1/2(12.7mm)		

OVAL/TRUSS HEAD

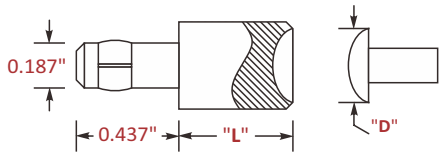

Rivet Head Diameter	
RS-2005	
"D" 0.187"(4.75mm)	
NO.	L
-24	1/2(12.7mm)

TUBULAR RIVETS

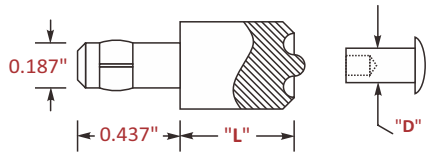

Rivet Head Diameter	
RS-2004	
"D" 0.375"(9.53mm)	
NO.	L
-23	3/8(9.5mm)

Choose of rivet dies

How to select the correct length of rivet die sets

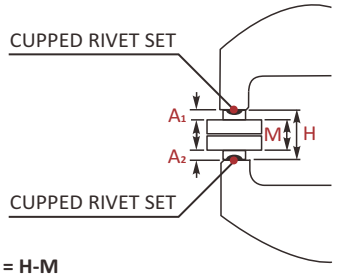

A_1-A_2 = H-M

When two cupped rivet sets are used:
The length of the body dimensions of the rivet sets (A_1, A_2) should equal the closed height dimension of the yoke H minus the total thickness of material being riveted together.

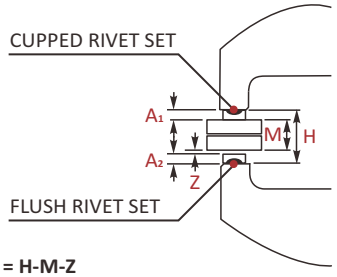

A_1-A_2 = H-M-Z

When one cupped set and one flush set are used:
The length of the body dimensions of the rivet sets (A_1, A_2) should equal the closed height dimension of the yoke H minus the total thickness of material being riveted (M) and the height of the finished rivet head (Z) compressed by the flush set (A).

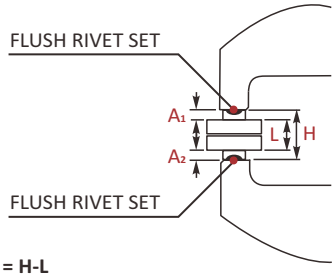

A_1-A_2 = H-L

When two flush sets are used:
The length of the body dimensions of the rivet sets (A_1, A_2) should equal the closed height dimension of the yoke H minus the overall length of the rivet (L) after it is compressed.

Rivet Squeezing Force Reference Chart of Different Materials & Diameters

BODY DIAMETER	MATERIAL	FORCE Lbf	FORCE KN	RIVET STYLE	BODY DIAMETER	MATERIAL	FORCE Lbf	FORCE KN	RIVET STYLE
3/32" (2.4 MM)	2017-T4	2,000	9	"D"RIVET	5/32" (4.0 MM)	A-286	14,200	63	
	2024-T4	1,600	7	"DD" RIVET		MONEL	6,000	27	
	2117-T4	1,500	7	"AD" RIVET		TITANIUM	14,500	64	
	A-286	7,500	33		3/16" (4.8 MM)	2017-T4	4,800	21	"D"RIVET
	MONEL	2,500	11			2024-T4	4,800	21	"DD" RIVET
	TITANIUM	6,000	27			2117-T4	4,000	18	"AD" RIVET
1/8" (3.2 MM)	2017-T4	2,400	11	"D"RIVET		A-286	19,700	88	
	2024-T4	2,000	9	"DD" RIVET		MONEL	10,250	46	
	2117-T4	1,900	8	"AD" RIVET		TITANIUM	19,800	88	
	A-286	9,600	43		1/4" (6.4 MM)	2017-T4	9,000	40	"D"RIVET
	MONEL	4,400	20			2024-T4	10,600	47	"DD" RIVET
	TITANIUM	9,200	41			2117-T4	8,500	38	"AD" RIVET
5/32" (4.0 MM)	2017-T4	3,500	16	"D"RIVET		A-286	31,600	141	
	2024-T4	3 500	16	"DD" RIVET		MONEL	17,500	78	
	2117-T4	2,900	13	"AD" RIVET		TITANIUM	35,200	157	

Shock Reduced Air Hammer

Features

- Designed with following patents for assuring the best shock reduction and operator's comfort.
  1) Portable pneumatic tool **assembled with module units**.
  2) **Suspension vibration-reducing** means for portable pneumatic tools.
- Alloy steel made impact parts, heat-treated for durability.
- Quick Change Retainer for simple accessory changes.
- **Ergonomic handle with rubber** made exhaust muffler for added operator's comfort.
- Optional patented universal swivel air inlet joint for the best maneuverability of the tool.

Patent pending in other countries

R.O.C.PAT.:
174,032/184,745

U.S.A.PAT.:
6,149,356/5,615,746

P.R.C.PAT.:
ZL 00 2 53627.7

Extreme Low Vibration

Shock Reduced Air Hammer

ZAH-392-Round
ZAH-392H-Hex.

ZAH-393-Round
ZAH-393H-Hex.

ZAH-394-Round
ZAH-394H-Hex.

ZAH-592-Round
ZAH-592H-Hex.

ZAH-593-Round
ZAH-593H-Hex.

ZAH-594-Round
ZAH-594H-Hex.

ZAH-392K
ZAH-392HK
ZAH-592K
ZAH-592HK

ZAH-393K
ZAH-393HK
ZAH-593K
ZAH-593HK

ZAH-394K
ZAH-394HK
ZAH-594K
ZAH-594HK

Accessories

- Shock Reduced Air Hammer X 1
- 192913 Retainer Spring
- CH641RL 7" Single End Cutter X 1
  CH645RL 7" Cut Off Chisel X 1
  CH649RL 7" Rivet Cutter Chisel X 1
  CH672RL 7" Special Panel Cutter X 1
  CH627RL 7" Shear Chisel X 1

*ZAH-393H, ZAH-593H, ZAH394H, ZAH594H chisel shank size are 0.410"(10.4mm) Hex. shank.

ZNS-392
Shock Reduced
Needle Scaler

ZCH-394B
Shock Reduced
Construction Air Hammer

Needle Scaler Attachment

CA2321
*No. of Needles: 19 pcs

ZCH-394BK

Accessories

- Shock Reduced Air Hammer X1
- 294903 Retainer Spring
- CA132910 7" Moil Point Chisel

294903

CA132910

Model	Chisel Shank Opening inch(mm)	Bore Diameter inch(mm)	Stroke Length inch(mm)	Blow Per Minute bpm	Avg. Air Cons. cfm(l/min)	Vibration m/s^2	Net Weight lbs(kgs)	Min. Hose Size inch(mm)
ZAH-392(H)	0.401(10.2)/0.410(10.4)	3/4(19)	1-31/32(50)	4000	15.2(430)	2.5	3.4(1.5)	3/8(10)
ZAH-393(H)	0.401(10.2)/0.410(10.4)	3/4(19)	2-5/8(66)	3000	4.95(140)	10	4(1.8)	3/8(10)
ZAH-394(H)	0.401(10.2)/0.410(10.4)	3/4(19)	3-1/2(89)	2100	5.65(160)	5.5	4.6(2.1)	3/8(10)
ZAH-592(H)	0.401(10.2)/0.410(10.4)	3/4(19)	1-31/32(50)	4000	15.2(430)	2.5	3.4(1.5)	3/8(10)
ZAH-593(H)	0.401(10.2)/0.410(10.4)	3/4(19)	2-5/8(66)	3000	4.95(140)	10	4(1.8)	3/8(10)
ZAH-594(H)	0.401(10.2)/0.410(10.4)	3/4(19)	3-1/2(89)	2100	5.65(160)	5.5	4.6(2.1)	3/8(10)
ZNS-392(H)	0.401(10.2)/0.410(10.4)	3/4(19)	1-31/32(50)	4000	15.2(430)	2.5	3.4(1.5)	3/8(10)
ZCH-394B(H)	0.401(10.2)/0.410(10.4)	3/4(19)	3-1/2(89)	2100	6(170)	5.3	4.6(2.1)	3/8(10)

- Operating Air Pressure: 90psi/6.2bar
- Air Inlet Size: 1/4" NPT/PT

Shock Reduced Air Hammer

Features

- Designed with following patents for assuring the best shock reduction and operator's comfort.
  1) Portable pneumatic tool **assembled with module units**.
  2) **Suspension vibration-reducing** means for portable pneumatic tools.
- Alloy steel made impact parts, heat-treated for durability.
- Quick Change Retainer for simple accessory changes.
- **Ergonomic handle with rubber** made exhaust muffler for added operator's comfort.
- Optional patented universal swivel air inlet joint for the best maneuverability of the tool.

ZAH-393S / ZAH-394S
Shock Reduced Air Hammer
With Special Chassis Chisel Sets

Accessories

CA193901

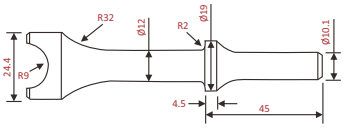

CA193902

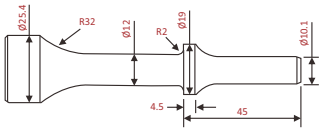

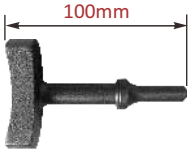

CA193903

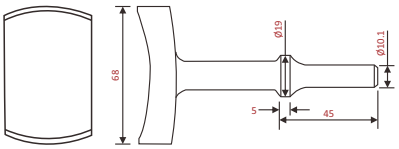

CA193904

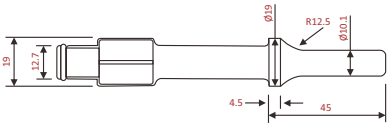

CA193909

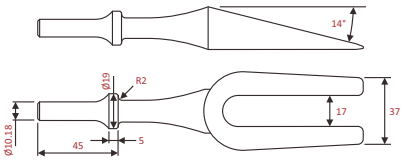

Optional

CA193910

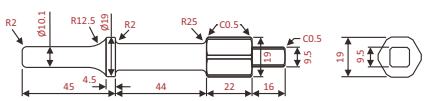

CA193911

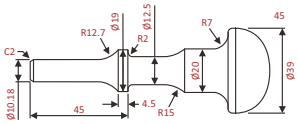

Model	Chisel Shank Opening inch(mm)	Bore Diameter inch(mm)	Stroke Length inch(mm)	Blow Per Minute bpm	Avg. Air Cons. cfm(l/min)	Vibration m/s^2	Net Weight lbs(kgs)	Min. Hose Size inch(mm)
ZAH-393S	0.401(10.2)	3/4(19)	2-5/8(66)	3000	4.95(140)	10	4(1.8)	3/8(10)
ZAH-394S	0.401(10.2)	3/4(19)	3-1/2(89)	2100	5.65(160)	5.5	4.6(2.1)	3/8(10)

- Operating Air Pressure: 90psi/6.2bar
- Air Inlet Size: 1/4" NPT/PT

Products and specifications subject to change without prior notice

Air Riveting Hammer

ZRH-131P
1X Air Riveting Hammer
-Pistol

ZRH-132P(TC)
ZRH-132PAP(TC)
2X Air Riveting Hammer
-Pistol

ZRH-133P(TC)
ZRH-133PAP(TC)
3X Air Riveting Hammer
-Pistol

ZRH-134P(TC)
ZRH-134PAP(TC)
4X Air Riveting Hammer
-Pistol

ZRH-131S
1X Air Riveting Hammer
-Straight

ZRH-132S(TC)
2X Air Riveting Hammer
-Straight

ZRH-133S(TC)
3X Air Riveting Hammer
-Straight

ZRH-134S(TC)
4X Air Riveting Hammer
-Straight

NEW
PRODUCT

Tungsten Carbide **(TC)**
piston
provides more powerful blows

ZRH-195P
5X Air Riveting Hammer
-Pistol

ZRH-197P
7X Air Riveting Hammer
-Pistol

ZRH-199P
9X Air Riveting Hammer
-Pistol

Use for aero space & general automotive industries, etc.

Model	Chisel Shank Opening inch(mm)	Bore Diameter inch(mm)	Stroke Length inch(mm)	Blow Per Minute bpm	Avg. Air Cons. cfm(l/min)	Max. Rivet Diameter Capacity		Joule	Overall Length inch(mm)	Net Weight lbs(kgs)
						Steel inch(mm)	Alum. inch(mm)			
ZRH-131P	0.401(10.2)	9/16(14.3)	1-3/8(35)	2850	6.4(180)	1/8(3.2)	5/32(4)	2.61	4.49(115)	2.3(1.0)
ZRH-132P(TC)	0.401(10.2)	1/2(12.7)	2-1/4(57.2)	2580	7.8(221)	3/32(2.4)	1/8(3.2)	3.37	6.63(170)	2.7(1.2)
ZRH-133P(TC)	0.401(10.2)	1/2(12.7)	2-7/8(73)	2160	7.78(220)	5/32(4)	3/16(4.8)	4.27	7.25(186)	2.9(1.3)
ZRH-134P(TC)	0.401(10.2)	1/2(12.7)	3-1/16(77.8)	1740	7.78(220)	3/16(4.8)	1/4(6.4)	4.30	8.22(211)	3.1(1.4)
ZRH-132PAP(TC)	0.401(10.2)	9/16(14.3)	2-1/4(57.2)	2580	5.7(160)	3/32(2.4)	1/8(3.2)	5.46	6.63(170)	2.7(1.2)
ZRH-133PAP(TC)	0.401(10.2)	9/16(14.3)	2-7/8(73)	2160	4.9(140)	5/32(4)	3/16(4.8)	4.59	7.25(186)	2.9(1.3)
ZRH-134PAP(TC)	0.401(10.2)	9/16(14.3)	3-1/16(77.8)	1740	6.4(180)	3/16(4.8)	1/4(6.4)	5.81	8.22(211)	3.1(1.4)
ZRH-131S	0.401(10.2)	9/16(14.3)	1-3/8(35)	2850	6.4(180)	1/8(3.2)	5/32(4)	2.61	6.3(160)	1.9(0.86)
ZRH-132S(TC)	0.401(10.2)	1/2(12.7)	2-1/4(57.2)	2580	6(170)	3/32(2.4)	1/8(3.2)	3.37	8.39(215)	2.4(1.06)
ZRH-133S(TC)	0.401(10.2)	1/2(12.7)	2-7/8(73)	2160	6(170)	5/32(4)	3/16(4.8)	4.27	9(231)	2.6(1.16)
ZRH-134S(TC)	0.401(10.2)	1/2(12.7)	3-1/16(77.8)	1740	6.4(180)	3/16(4.8)	1/4(6.4)	4.30	9.98(256)	2.8(1.27)
ZRH-195P	0.498(12.6)	3/4(19.1)	2-11/16(68.3)	1560	7.78(220)	3/16(4.8)	1/4(6.4)	9.03	8.97(230)	4.6(2.1)
ZRH-197P	0.498(12.6)	3/4(19.1)	5-13/16(147.6)	900	9.19(260)	5/16(8)	3/8(9.5)	19.51	11.07(284)	5.5(2.5)
ZRH-199P	0.498(12.6)	3/4(19.1)	3-7/8(98.4)	1140	7.78(220)	1/4(6.4)	5/16(8)	13.01	9.98(256)	5(2.3)

- Operating Air Pressure: 90psi/6.2bar
- Min. Hose Size: 3/8(10)inch(mm)
- Air Inlet Size: 1/4" NPT/PT

Shock Reduced Riveting Hammer / Bucking Bar

Features

- The new ZRH riveting hammer is designed to minimize the vibration while maintaining high tool performance. Vibration is reduced by an effective air cushion behind the hammer piston.
- Parts are interchangeable with RRH series.
- Streamline profile & adjustable power.
- Equipped with universal swivel air inlet joint for the best maneuverability.

Low Vibration

ZRH-04
Shock Reduced
Air Riveting Hammer

ZRH-06
Shock Reduced
Air Riveting Hammer

ZRH-08
Shock Reduced
Air Riveting Hammer

Use for aero space & general automotive industries, etc.

Model	Chisel Shank Opening inch(mm)	Bore Diameter inch(mm)	Piston Stroke inch(mm)	bpm	Air Consumption cfm	Max. Rivet Diameter Capacity		Overall Length inch(mm)	Vibration m/s^2	Weight lbs(kgs)
						Steel inch(mm)	Alum. inch(mm)			
ZRH-04	0.401(10.2)	0.6(15.24)	1.57(40)	3960	6	3/21~5/32(1~4)	3/32~3/16(2~5)	7.1(180)	2.5	2.2(1)
ZRH-06	0.401(10.2)	0.6(15.24)	4.02(102)	2160	19	1/8~1/4(3~6)	5/32~1/4(4~7)	8.9(225)	3.9	2.9(1.33)
ZRH-08	0.401(10.2)	0.6(15.24)	5.39(137)	1440	21	5/32~1/4(4~7)	3/16~5/16(5~8)	11(280)	4.8	2.9(1.33)

- Air Inlet Size: 1/4" NPT/PT
- Air Hose (I.D): 9.5(10)inch(mm)

Features

- An efficient riveting system consists of shock reduced bucking bar with shock reduced riveting hammers.
- Self-adjustable - SP models use a spring as shock reducing element and consequently do not require the air supply.
- Flexible - The bucking bars can fitted with serval different interchangeable dolly configurations via a quick change retainer for maximum flexibility.

ZBB10SP
Shock Reduced
Bucking Bars

ZBB16SP
Shock Reduced
Bucking Bars

Model	Diameter inch(mm)	Net Weight lbs(kgs)
ZBB10SP	2.0(48)	2.4(1.1)
ZBB16SP	2.0(48)	3.7(1.7)

Products and specifications subject to change without prior notice

Shock Reduced Air Riveting Hammer

Features

- Designed with following patents for assuring the best shock reduction and operator's comfort.
  1) Portable pneumatic tool **assembled with module units**.
  2) **Suspension vibration-reducing** means for portable pneumatic tools.
- Alloy steel made impact parts, heat-treated for durability.
- Spool valve allows slow heavy blows needed to drive rivets.
- **Ergonomic handle with rubber** made exhaust muffler for added operator's comfort.
- Optional patented universal swivel air inlet joint for the best maneuverability of the tool.

Patent pending in other countries

R.O.C.PAT.:
174,032/184,745

U.S.A.PAT.:
6,149,356/5,615,746

P.R.C.PAT.:
ZL 00 2 53627.7

Shock Reduced Air Riveting Hammer

NEW PRODUCT

Tungsten Carbide **(TC)** piston provides more powerful blows

Shock Reduced

Low Vibration

ZRH-132N(TC)
ZRH-132NP(TC)
2X Shock Reduced Air Riveting Hammer

Low Vibration

ZRH-133N(TC)
ZRH-133NP(TC)
3X Shock Reduced Air Riveting Hammer

Low Vibration

ZRH-134N(TC)
ZRH-134NP(TC)
4X Shock Reduced Air Riveting Hammer

Features

- Patented Shock Reduced Mechanism.
- Low vibration design to prevent operator's injury after long time use.
- Ergonomic handle with rubber made exhaust muffler for added operator's comfort.
- Optional patented Universal Swivel Air Inlet Joint for the best maneuverability of the tool.
  Use for aero space & general automotive industries, etc.

ZRH-132N(TC)K / ZRH-132NP(TC)K
ZRH-133N(TC)K / ZRH-133NP(TC)K
ZRH-134N(TC)K / ZRH-134NP(TC)K

- CA132901 X1
- CA132902 X1
- CA132903 X1
- CA132904 X1
- CA132905 X1
- 192902 Retainer Spring X1

Model	Chisel Shank Opening inch(mm)	Bore Diameter inch(mm)	Stroke Length inch(mm)	Blow Per Minute bpm	Avg. Air Cons. cfm(l/min)	Max. Rivet Diameter Capacity		Net Weight lbs(kgs)
						Steel inch(mm)	Alum. inch(mm)	
ZRH-132N(TC)	0.401(10.2)	1/2(12.7)	2-1/4(57.2)	2580	6.71(190)	3/32(2.4)	1/8(3.2)	2.9(1.3)
ZRH-132NP(TC)	0.401(10.2)	9/16(14.3)	2-1/4(57.2)	2580	6.71(190)	3/32(2.4)	1/8(3.2)	2.9(1.3)
ZRH-133N(TC)	0.401(10.2)	1/2(12.7)	2-7/8(73)	2164	7.42(210)	5/32(4)	3/16(4.8)	2.9(1.3)
ZRH-133NP(TC)	0.401(10.2)	9/16(14.3)	2-7/8(73)	2164	7.42(210)	5/32(4)	3/16(4.8)	2.9(1.3)
ZRH-134N(TC)	0.401(10.2)	1/2(12.7)	3-1/16(77.8)	1740	7.42(210)	3/16(4.8)	1/4(6.4)	3.7(1.7)
ZRH-134NP(TC)	0.401(10.2)	9/16(14.3)	3-1/16(77.8)	1740	7.42(210)	3/16(4.8)	1/4(6.4)	3.7(1.7)

- Vibration: $6m/s^2$
- Operating Air Pressure: 90psi/6.2bar
- Air Inlet Size: 1/4"NPT/PT

Patent pending in other countries

R.O.C.PAT.:
184,745

U.S.A.PAT.NO.:
5,533,579

P.R.C.PAT.:
ZL 00 2 53627.7

Products and specifications subject to change without prior notice

Rivet Chisels / Retainers

For ZRH-131P ZRH-131PA, ZRH-131S

- Chisel Shank: 10.2mm(0.401")
- Material SCM440 Alloy
- Hardness: 48~51°

131901

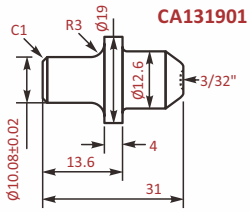

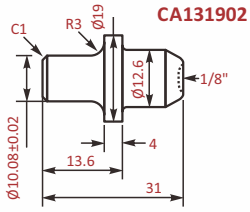

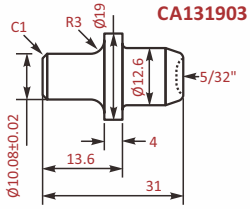

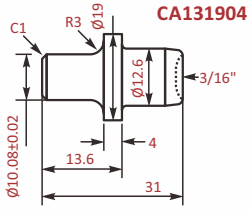

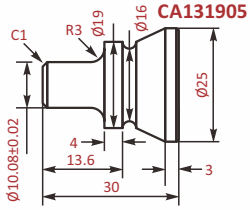

For ZRH-132P, ZRH-132PAP, ZRH-132S ZRH-133P, ZRH-133PAP, ZRH-133S ZRH-134P, ZRH-134PAP, ZRH-134S ZRH-132N, ZRH-133N, ZRH-134N

- Chisel Shank: 10.2mm(0.401")
- Material SCM440 Alloy
- Hardness: 48~51°

192902

Optional

192903

132914

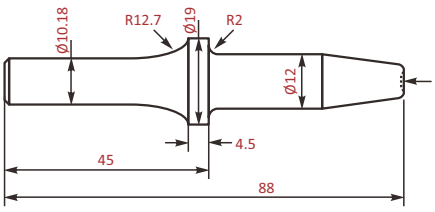

CA132901
3/32"
CA132901M
2.6mm

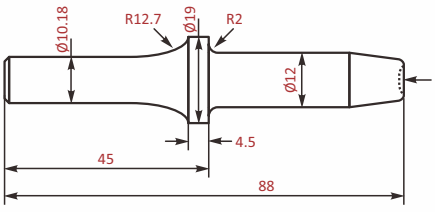

CA132902
1/8"
CA132902M
3mm

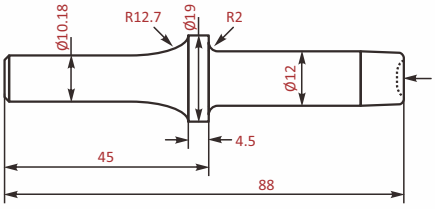

CA132903
5/32"
CA132903M
3.5mm

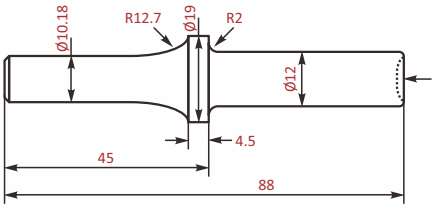

CA132904
3/16"
CA132904M
4mm

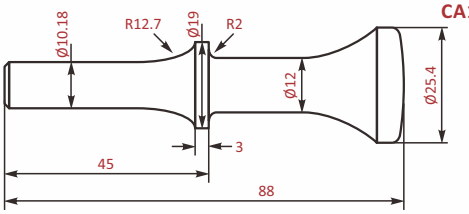

CA132905

For ZRH-195P, ZRH-197P, ZRH-199P

- Chisel Shank: 12.6mm(0.498")
- Material SCM440 Alloy
- Hardness: 48~51°

195901-16

Optional

195903

195914

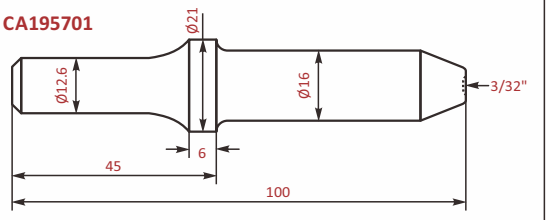

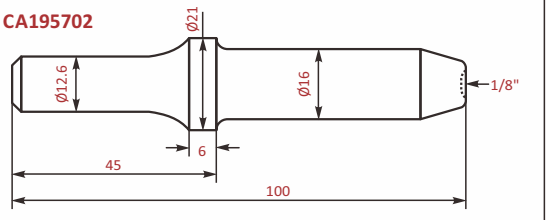

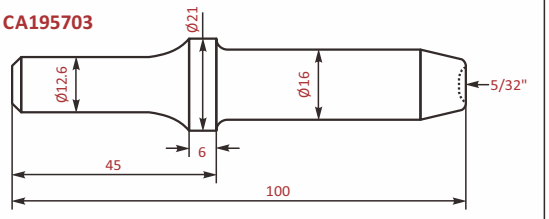

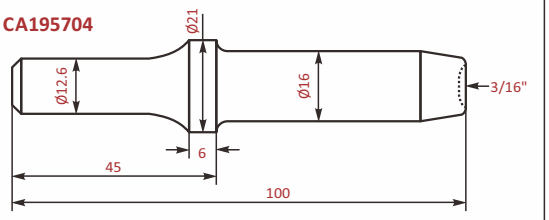

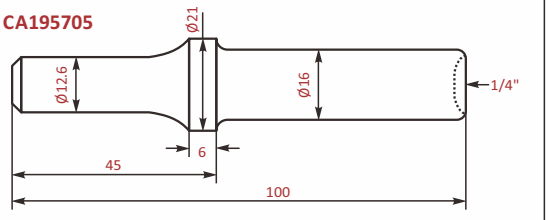

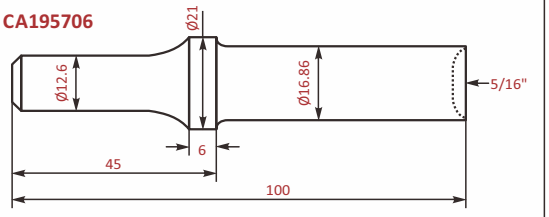

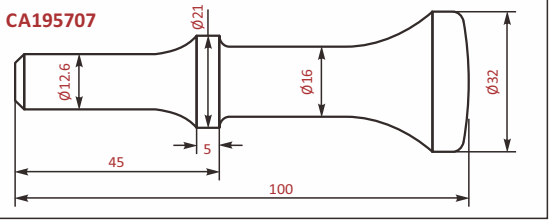

Rivet Chisels / Retainers

For ZRH-132P, ZRH-132PAP, ZRH-132S ZRH-133P, ZRH-133PAP, ZRH-133S ZRH-134P, ZRH-134PAP, ZRH-134S ZRH-132N, ZRH-133N, ZRH-134N

- Chisel Shank: 10.2mm(0.401")
- Hardness: 48~51°
- Material SCM440 Alloy

For ZRH-195P, ZRH-197P, ZRH-199P

- Chisel Shank: 12.6mm(0.498")
- Hardness: 48~51°
- Material SCM440 Alloy

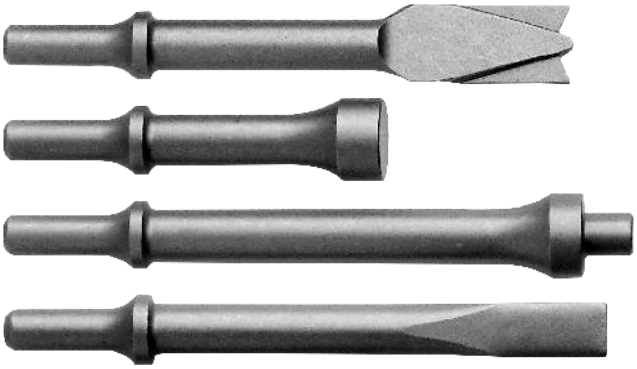

CA132906

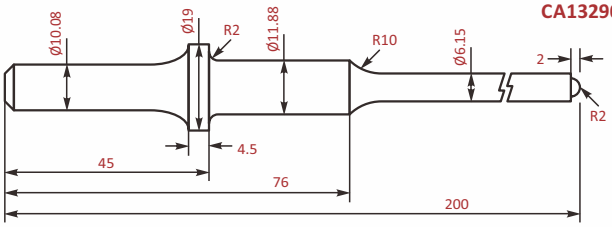

CA132907

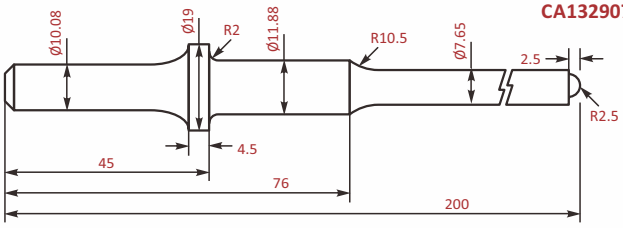

CA132908

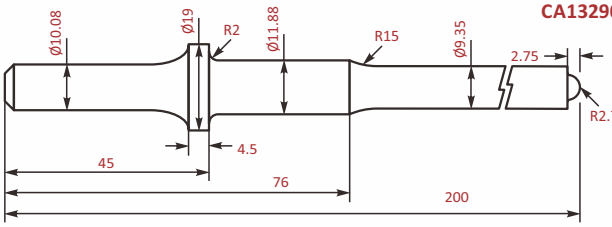

CA132909

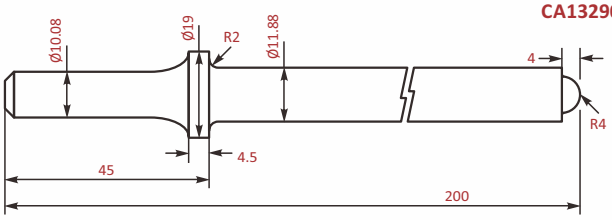

CA195908

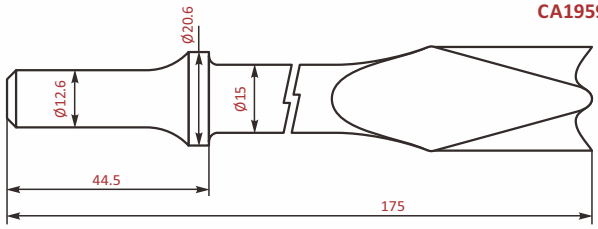

CA195909

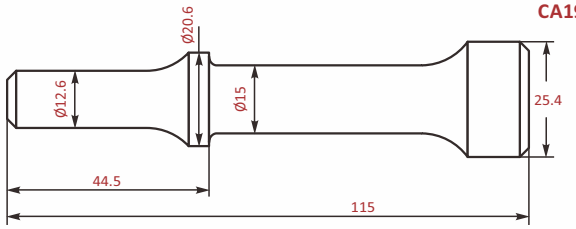

CA195910

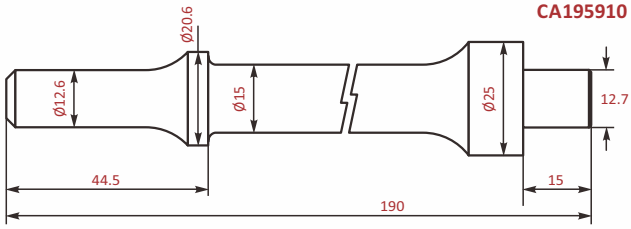

CA195911

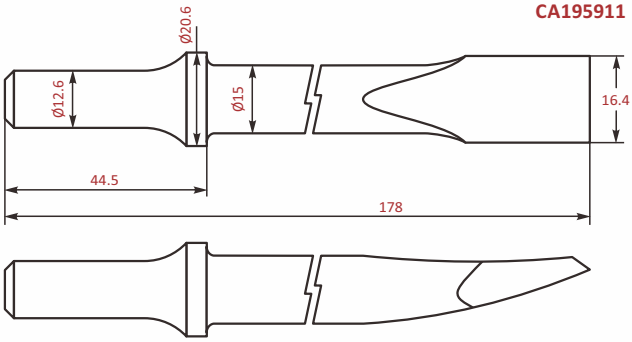

Products and specifications subject to change without prior notice

Vibration Reduced Air Saw / Air Pipe Saw / Industrial Air Saw

Features

- Designed with following patents to assure extreme low vibration and operator's comfort.
  1)Portable pneumatic tool assembled with module units in clam shell composite housing.
  2)Suspension vibration-reducing means for portable pneumatic tools.
- Engineering plastic made clam-shell housing designed for easy service.
- Patented universal swivel air inlet joint for the best maneuverability of the tool.
- Safety trigger to prevent accidental start ups and provide operator's comfort.
- Rear exhaust directs air away from work-piece.

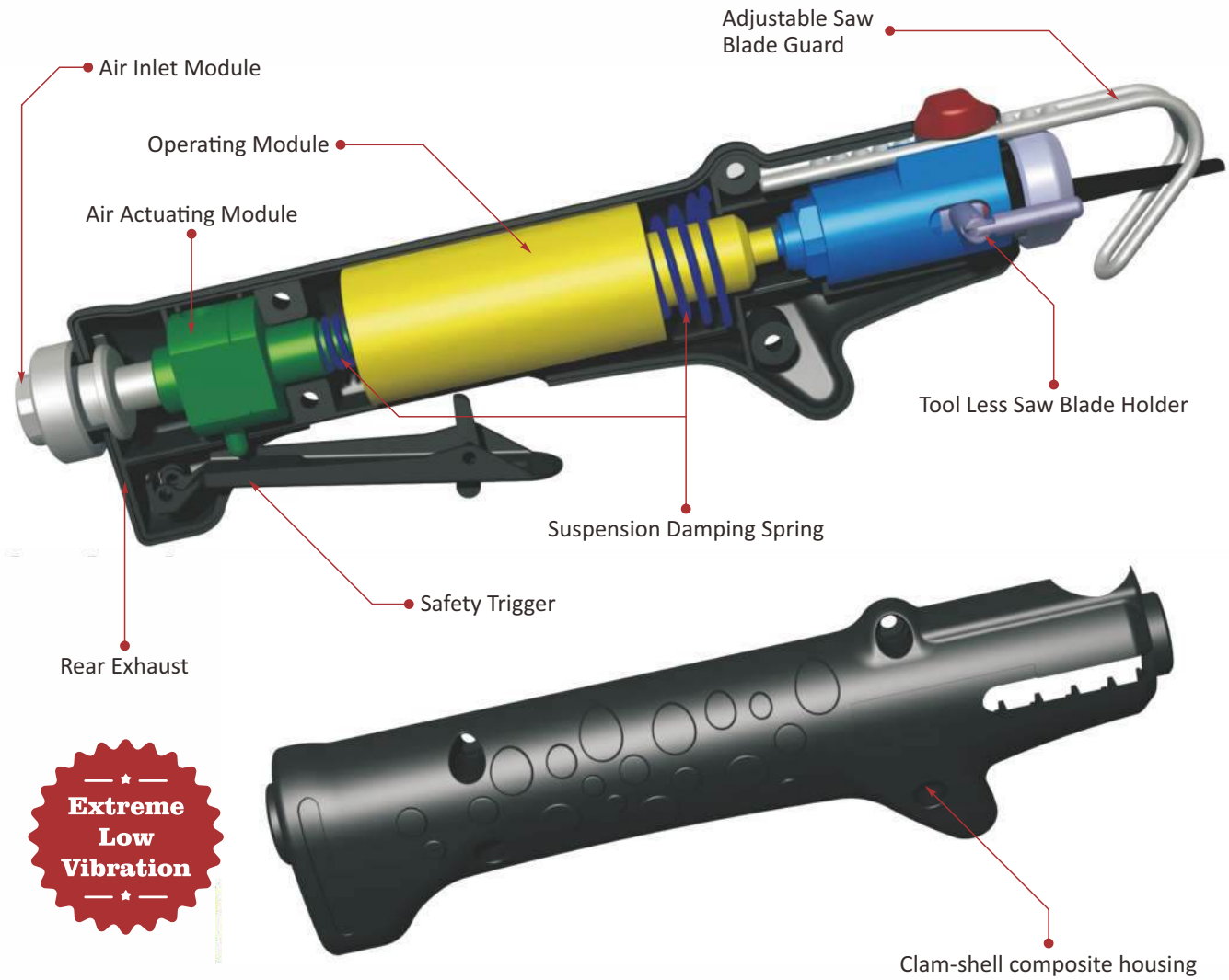

Extreme Low Vibration

Patent pending in other countries

R.O.C.PAT.:
174,032/184,745

U.S.A.PAT.:
6,149,356/5,615,746

P.R.C.PAT.:
ZL 00 2 53627.7

Vibration Reduced Air Body Saw / Air Pipe Saw

10mm stroke

ZS311
Metal Housing

ZS311K

Kit include:
- Bi-metal blades
  18T X 5
  24T X 5
  32T X 5

25mm stroke

ZS317
Metal Housing

ZS317K

Kit include:
- Bi-metal blades
  18T X 5
  24T X 5

10mm stroke

ZS319
Clam-Shell Composite Housing

ZS319K

Kit include:
- Bi-metal blades
  18T X 5
  24T X 5
  32T X 5

25mm stroke

ZS329
Clam-Shell Composite Housing

ZS329K

Kit include:
- Bi-metal blades
  18T X 5
  24T X 5

10mm stroke

ZS319H
Clam-Shell Composite Housing

ZS319HK

Kit include:
- Bi-metal blades
  18T X 5
  24T X 5
  32T X 5

25mm stroke

ZS329H
Clam-Shell Composite Housing

ZS329HK

Kit include:
- Bi-metal blades
  18T X 5
  24T X 5

*10mm stroke models are good for 3mm steel sheet cutting.
*25mm stroke models are good for 5mm up to 10mm steel sheet or pipe cutting.

Model	Blow Per Minute bpm	Stroke Length mm	Avg. Air Cons. cfm(l/min)	Noise Level db(A)	Vibration m/s^2	Net Weight lbs(kgs)	Min. Hose Size inch(mm)	Air Inlet Size inch-NPT/PT
ZS311	9500	10	3.5(100)	85	1.8	1.5(0.7)	3/8(10)	1/4
ZS317	5000	25	3(90)	85	3.9	2.1(0.96)	3/8(10)	1/4
ZS319	9500	10	3(90)	85	3.7	1.12(0.51)	3/8(10)	1/4
ZS329	5000	25	2.8(80)	85	4.3	1.68(0.76)	3/8(10)	1/4
ZS319H	9500	10	3.5(100)	85	3.7	1.12(0.51)	3/8(10)	1/4
ZS329H	5000	25	3.5(100)	85	4.3	1.68(0.76)	3/8(10)	1/4

- Operating Air Pressure: 90psi/6.2bar

Products and specifications subject to change without prior notice

Vibration Reduced Air Body Saw

Extreme Low Vibration

10mm stroke

ZS319-T2B

Vibration Reduced Air Body Saw
Clam-Shell Composite Housing

20mm stroke

ZS317MK

Kit include:
- Bi-metal blades
  14T X 5
  18T X 5
  24T X 5

ZS317M

Vibration Reduced Mini Air Body Saw
Metal Housing

10mm stroke

ZS311MK

Kit include:
- Bi-metal blades
  18T X 5
  24T X 5
  32T X 5

ZS311M

Vibration Reduced Mini Air Body Saw
Metal Housing

10mm stroke

ZS312MK

Kit include:
- Bi-metal blades
  18T X 5
  24T X 5
  32T X 5

ZS312M

Vibration Reduced Mini Air Body Saw
Metal Housing

Model	Blow Per Minute bpm	Stroke Length mm	Avg. Air Cons. cfm(l/min)	Noise Level db(A)	Vibration m/s^2	Net Weight lbs(kgs)	Min. Hose Size inch(mm)	Air Inlet Size inch-NPT/PT
ZS319-T2B	9500	10	3(90)	85	3.7	1.17(0.53)	3/8(10)	1/4
ZS311M	10000	10	7.6(215)	80.4	4.3	1.0(0.45)	3/8(10)	1/4
ZS312M	10000	10	7.6(215)	80.4	4.3	1.0(0.45)	3/8(10)	1/4
ZS317M	5800	20	6.9(195)	81.5	8.4	1.17(0.53)	3/8(10)	1/4

- Operating Air Pressure: 90psi/6.2bar

Vibration Reduced Pneumatic Roofing Cutter

- Designed to assure extreme low vibration for operator's comfort.
- Portable pneumatic tool assembled with module units in clam shell composite housing.
- Engineering plastic made clam-shell housing designed for easy service.
- Universal swivel air inlet joint for the best maneuverability of the tool.
- Blades offer efficient and fast cutting in cold weather to reduce down time.
- These blades cut through a variety of material including shingles, roofing paper, and asphalt roll roofing, etc.
- Blades offer seamless cutting of straight edges provides more efficient to the applications.
- Can be used on ANY ZIPP vibration reduced air saws for the best performance.

Shingles

Asphalt Roll Roofing

Roofing paper

ZRC-311
Metal Housing

ZRC-319
Composite Housing

3.5" Hook Roofing Cutter Blade Kit

ZRC-311K		ZRC-319K	
	Kit include: ● Bi-metal blades 18T X 5 24T X 5 32T X 5 ● 3.5" cutting blade X3		Kit include: ● Bi-metal blades 18T X 5 24T X 5 32T X 5 ● 3.5" cutting blade X3

Accessories	
314990-3	3 pcs
314990-5	5 pcs
314990-10	10 pcs

Each cutter includes 3 pcs 3.5Hook Roofing Cutter Blades

Model	Blow Per Minute bpm	Stroke Length mm	Avg. Air Cons. cfm(l/min)	Noise Level db(A)	Vibration m/s²	Net Weight lbs(kgs)	Min. Hose Size inch(mm)	Air Inlet Size inch-NPT/PT
ZRC-311	9500	10	3.5(100)	85	1.8	1.5(0.7)	3/8(10)	1/4
ZRC-319	9500	10	3.5(100)	85	3.7	1.12(0.51)	3/8(10)	1/4

- Operating Air Pressure: 90psi/6.2bar

Products and specifications subject to change without prior notice

Vibration Reduced Industrial Air Saw

Applications

The most powerful Industrial Air Saw for clean, burr-free cuts with standard hacksaw blades in serving a wide range of industries and emergency services where reliability and durability are really matter such as Petrochemicals, Oil Rigs, Power Stations, Public Transport Facilities, Coal Mines, Fire Brigades, Airways & Airport Facilities, Railway, Garages, Car Manufacturers, Commercial Vehicle Builders, Boat Building, Reinforced Fiberglass, Shipyard use, Ministry of Defense-Army, Navy, Air Force, etc.

Capacity Features

- Excellent sawing work of various materials, trims or shapes sheet metal, plastics, plates, fiberglass, plywood, or cut pipe, rod, bar in any place.
- Available anywhere in ship, in oil tank, in mining tunnel, in construction site, in plant, in water, for rescue work, in car accident, etc.
- Most versatile maintenance tool-used throughout industry.
- Clean and burr-free cuts with standard hacksaw blades.
- Adaptable for cutting a variety of materials with proper saw blades.
- Ideal for sustained usage and suitable for the most awkward places.
- Used throughout fiberglass boat building and car body repair shop industries.
- Powerful enough to easily and quickly cut through steel-flexible enough to enough to efficiently and accurately cut in even the most awkward place.

Construction Features

- Designed with a patented vibration reduced mechanism to ensure the lowest vibration and most operator comfort.
- Few moving parts means breakdowns are virtually eliminated-ensuring total reliability and long trouble-free service.
- Safety Switch-essential for when changing blades.
- Quiet in operation-enables you to use it anywhere.
- Electro-chemical treated bores giving long-wearing quality.
- Slim, compact and lightweight design for easy portability.
- Blade and work piece cooled by exhausted air and oil.
- Special alloy steel made Nosepiece ensures the highest level of durability.
- Automatic and visible lubrication.
- Extremely low air consumption. Operates on normal compressed air supply.
- Safe to use in non-flame areas.
- 45MM stroke length and ability to accept short pieces of blades making it ideal for cutting in confined spaces and "Double skin" panels.

Extreme Low Vibration

45mm stroke

Cutting Capacity			
Pipe Material	Steel	Steel	Steel
Wall Thickness	2.4mm	3.5mm	5mm
Pipe O.D.	22mm	34mm	80mm
Saw Blade	14T.P.I Bacho Blades		
Cut Off Time(sec.)	9	21	470

Test under same condition as:
1) 90psi air pressure.
2) 5kg standard load weight on the tool while testing.

Accessories

- Patented Universal Swivel Joint X 1
- Carrying Box X 1
- Oiler Pot X 1
- Each of 300mm 14TPI & 8/12TPI Bi-Metal BAHCO Saw Blades (1/2" W x 12" L x 0.025" T) X 1
- 3mm Hex Wrench X 1
- Hand Grip X 1

Model	Blow Per Minute bpm	Stroke Length mm	Avg. Air Cons. cfm(l/min)	Noise Level db(A)	Vibration m/s²	Net Weight lbs(kgs)	Min. Hose Size inch(mm)	Air Inlet Size inch-NPT/PT
ZS350D	1200	45	4.6(130)	85	5	6.17(2.8)	3/8(10)	1/4

- Operating Air Pressure: 90psi/6.2bar

Vibration Reduced Air Lapper / Air File

Features

- High frequency with 1mm, 5mm & 10mm strokes for various kind of surface finishing works such as precise and delicate lapping of die & mold surface, finishing in confined area and general filing works.
- Designed with following patents to ensure extreme low vibration and operator's comfort.
  - Portable Pneumatic Tool assembled with module units.
  - Suspension Vibration-Reducing means for portable pneumatic tools.
- Throttle type flexible hose equipped for the best maneuverability of the tool.
- Adjustable side exhaust directs air away from operators.
- Rubber sleeve designed for operator's comfort.

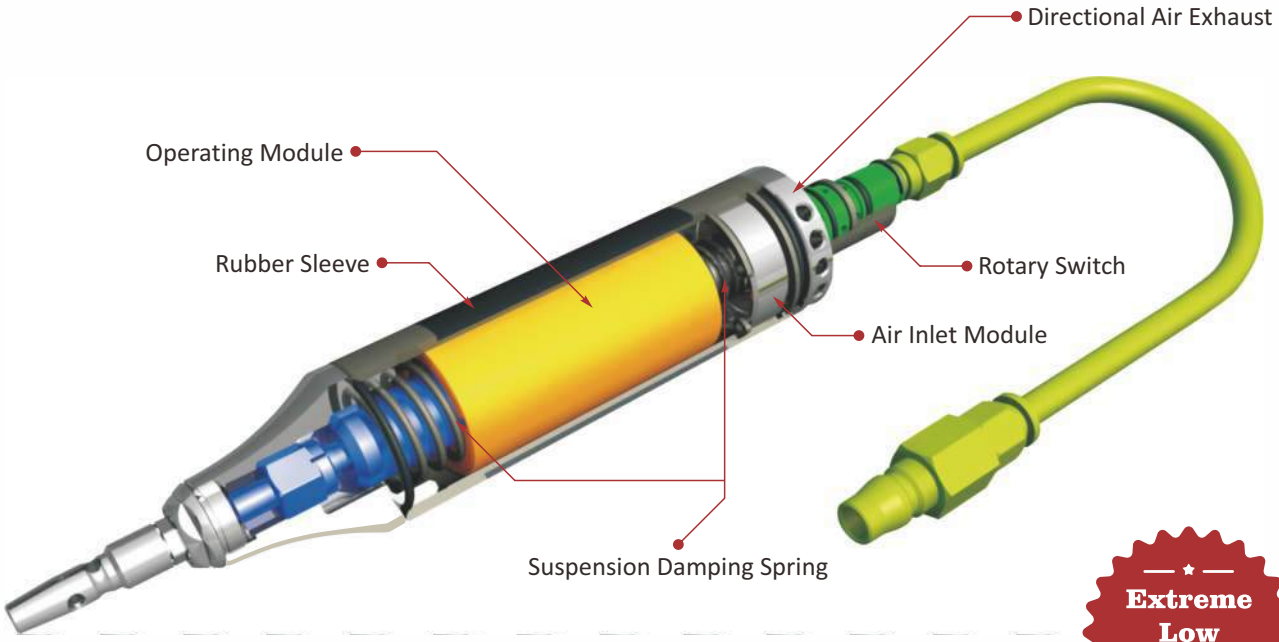

Extreme Low Vibration

Patent pending in other countries

R.O.C.PAT.:
174,032/184,745

U.S.A.PAT.:
6,149,356/5,615,746

P.R.C.PAT.:
ZL 00 2 53627.7

All rotary type Switch can be converted to safety lever type Switch upon request.

Vibration Reduced Air Lapper / Air File

Extreme Low Vibration

Features

- Ideal for precise and delicate filing castings, also perfect for lapping die and mold surface.
- High frequency with 0.5~1mm stroke for ZF-1, ZF-1T, ZF-1M, ZF-1MT
- High frequency with 3~5mm stroke for ZF-5, ZF-5T, ZF-5M, ZF-5MT
- High frequency with 7~10mm stroke for ZF-10, ZF-10T, ZF-10M, ZF-10MT

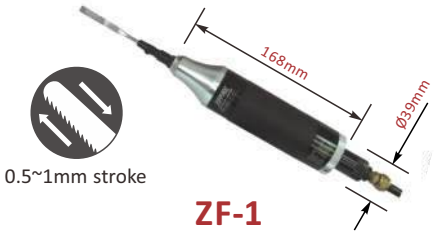

ZF-1
Vibration Reduced
Air Lapper

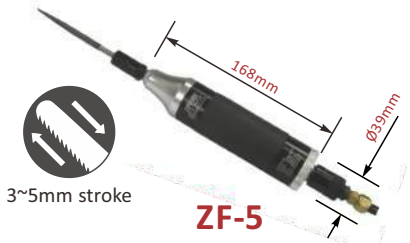

ZF-5
Vibration Reduced
Air File

ZF-10
Vibration Reduced
Air File

ZF-1T
Vibration Reduced
Air Lapper-Safety Trigger

ZF-5T
Vibration Reduced
Air File-Safety Trigger

ZF-10T
Vibration Reduced
Air File-Safety Trigger

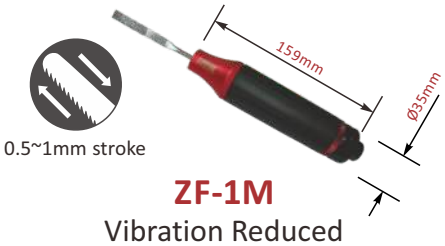

ZF-1M
Vibration Reduced
Mini Air Lapper

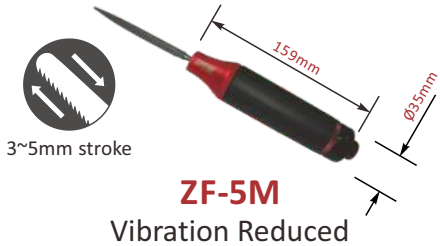

ZF-5M
Vibration Reduced
Mini Air File

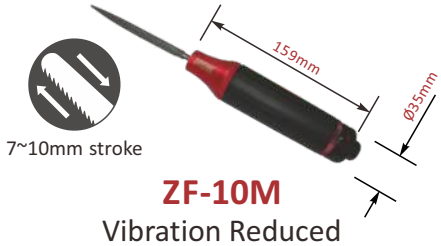

ZF-10M
Vibration Reduced
Mini Air File

ZF-1MT
Vibration Reduced
Mini Air Lapper-Safety Trigger

ZF-5MT
Vibration Reduced
Mini Air File-Safety Trigger

ZF-10MT
Vibration Reduced
Mini Air File-Safety Trigger

Model	Blow Per Minute bpm	Stroke Length mm	Avg. Air Cons. cfm(l/min)	Noise Level db(A)	Vibration m/s^2	Net Weight lbs(kgs)	Min. Hose Size inch(mm)	Air Inlet Size inch-NPT/PT
ZF-1(T)	21000	0.5~1	4(120)	72	0.8	1.26(0.57)/1.41(0.64)	3/8(10)	1/4
ZF-5(T)	11000	3~5	2.82(80)	83	3.6	1.54(0.7)/1.69(0.77)	3/8(10)	1/4
ZF-10(T)	9000	7~10	3.89(110)	71	4.6	1.65(0.75)/1.8(0.82)	3/8(10)	1/4
ZF-1M(MT)	21000	0.5~1	4(120)	72	0.8	0.73(0.33)/1.04(0.47)	3/8(10)	1/4
ZF-5M(MT)	11000	3~5	2.82(80)	83	3.6	0.73(0.33)/1.04(0.47)	3/8(10)	1/4
ZF-10M(MT)	9000	7~10	3.89(110)	71	4.6	0.73(0.33)/1.04(0.47)	3/8(10)	1/4

- Operating Air Pressure: 90psi/6.2bar

Saw Blade

-For ZS350D

350812L(300-8/12-SL)

350914L(300-14-ST)

-For ZS311, ZS311M, ZS315, ZS319, ZS319H, ZS319-T2R, ZS319-T2B

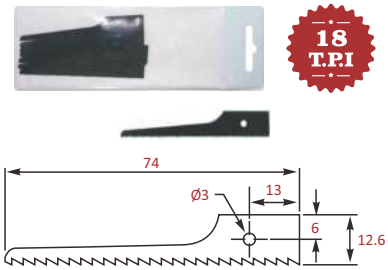

314918Z-5(5pcs) / 314918Z-10(10pcs)

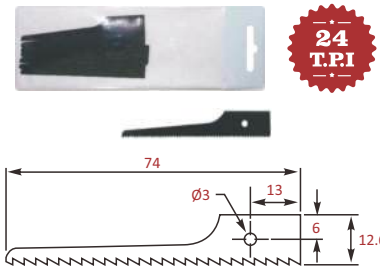

314924Z-5(5pcs) / 314924Z-10(10pcs)

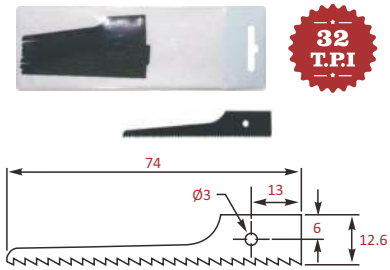

314932Z-5(5pcs) / 314932Z-10(10pcs)

-For ZS317, ZS317M, ZS329, ZS329H

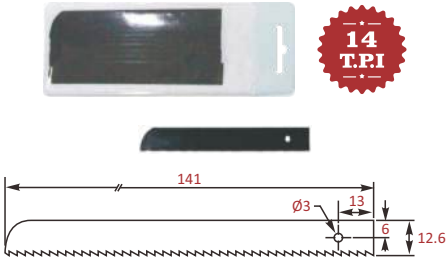

317914Z-5(5pcs) / 317914Z-10(10pcs)

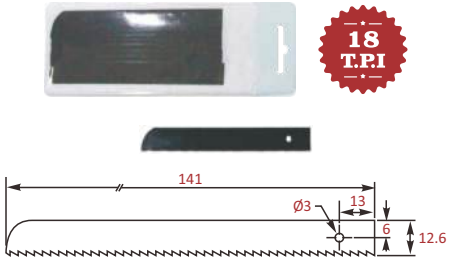

317918Z-5(5pcs) / 317918Z-10(10pcs)

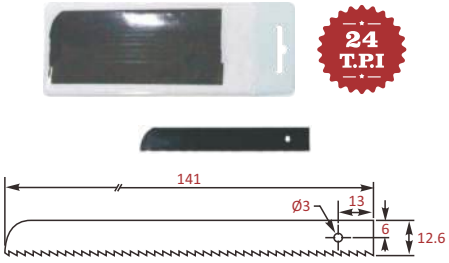

317924Z-5(5pcs) / 317924Z-10(10pcs)

Regular File

-For ZF-5, ZF-5T, ZF-5M, ZF-5MT, ZF-10, ZF-10T, ZF-10M, ZF-10MT Type Air File, 5mm Shank Diameter

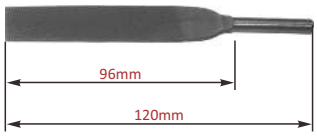

325901
Rectangular File

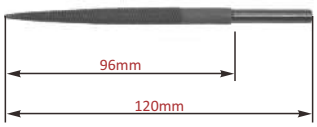

325902
Round File

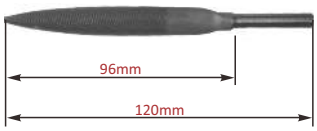

325903
Half Round File

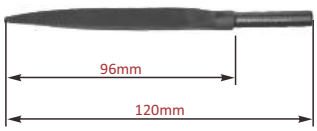

325904
Triangular File

Diamond File

-For ZF-1, ZF-1T, ZF-1M, ZF-1MT Type Air Lapper, 3mm Shank Diameter

201952
2mm Rectangular Diamond File

201954
4mm Rectangular Diamond File

201956
6mm Rectangular Diamond File

Products and specifications subject to change without prior notice

Air Metal Shear / Air Scissors

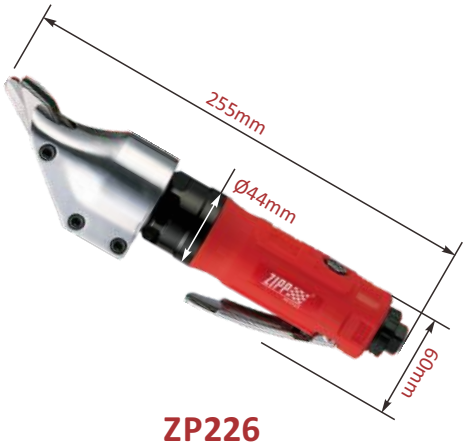

ZP226
Air Metal Shear

- The ZP226 Air Shear is ideal for the trimming , outlining and shearing of various sheet.
- The heavy-duty cutting blades make clean cut in cold rolled steel up to 18-gauge.
- The shear is ideal for body shop, sheet metal shop, and machine shop.

ZP227
Air Scissors

- The ZP227 Air Scissors is ideal for contour snip.
- The heavy duty blades make quick and clean snip.
- The scissors is ideal for body shop and machine shop.

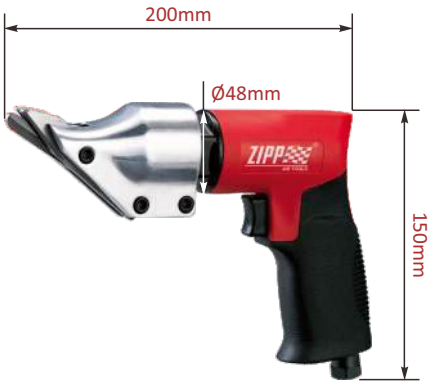

ZP228
Pistol-Grip Air Shear

- Lightweight and durable composite pistol-grip for great control.

ZP229
Pistol-Grip Air Scissors

- Lightweight and durable composite pistol-grip for great control.

ZS-01
Shear Head

ZS-02
Scissors Head

Model	Cutting Capacity Steel	Cutting Capacity Aluminum	rpm	Avg. Air Cons. cfm	Length inch(mm)	Net Weight lbs(kgs)	Min. Hose Size inch(mm)	Air Inlet Size inch-NPT/PT
ZP226	1.2mm	1.6mm	2600	3.7	10(255)	2.2(1)	3/8(10)	1/4
ZP227	1.2mm	1.6mm	2600	3.7	11.4(290)	2.2(1)	3/8(10)	1/4
ZP228	1.2mm	1.6mm	2600	3.7	7.8(200)	2.2(1)	3/8(10)	1/4
ZP229	1.2mm	1.6mm	2600	3.7	9.4(240)	2.2(1)	3/8(10)	1/4

- Operating Air Pressure: 90psi/6.2bar

ZD300 / ZD600 / ZD900 0.7HP
1/2" Industrial Air Drill

ZD3600 0.7HP
3/8" Industrial Air Drill

ZRD1600 / ZRD2400 0.7HP
3/8" Industrial
Air Reversible Drill

ZRD220 0.7HP
ZRD400 / ZRD700 0.7HP
1/2" Industrial
Air Reversible Drill

ZRD3625C / ZRD3645C 0.7HP
1/2" Air Reversible Drill
Composite Housing

ZRD3600C 0.7HP
3/8" Air Reversible Drill
Composite Housing

ZRR21 0.9HP
Blind Rivet & Rivet Nut
Removal Tool
Adjustable precise shaving in 0.01mm increment.

Model	Capacity inch(mm)	Spindle Size inch	Shaver skirt & Bits dia.	Free Speed rpm	Avg. Air Cons. cfm(l/min)	Overall Length mm	Net Weight lbs(kgs)
ZRD220/ZRD400	1/2(13)	3/8"-24	–	220/410	5(141)	230	3.8(1.7)
ZRD700	1/2(13)	3/8"-24	–	700	5(141)	230	3.8(1.7)
ZD300/ZD600	1/2(13)	3/8"-24	–	300/600	5(141)	230	3.8(1.7)
ZD900	1/2(13)	3/8"-24	–	900	5(141)	230	3.8(1.7)
ZRD1600/ZRD2400	3/8(10)	3/8"-24	–	1600/2200~2400	5(141)	185/165	2.5(1.1)
ZD3600	3/8(10)	3/8"-24	–	3500	5(141)	185	2.5(1.1)
ZRD3600C	3/8(10)	3/8"-24	–	1500	5(141)	175	2.2(1)
ZRD3625C	1/2(13)	3/8"-24	–	220	5(141)	185	3.3(1.5)
ZRD3645C	1/2(13)	3/8"-24	–	500	5(141)	185	3.3(1.5)
ZRR21-5/16	–	–	5/16"	21000	17(180)	265	3.3(1.5)
ZRR21-3/8	–	–	3/8"	21000	17(180)	265	3.3(1.5)
ZRR21-7/16	–	–	7/16"	21000	17(180)	265	3.3(1.5)
ZRR21-1/2	–	–	1/2"	21000	17(180)	265	3.3(1.5)
ZRR21-9/16	–	–	9/16"	21000	17(180)	265	3.3(1.5)
ZRR21-5/8	–	–	5/8"	21000	17(180)	265	3.3(1.5)

- Min. Hose Size: 3/8(10)inch(mm)
- Air Inlet Size: 1/4" NPT/PT

Products and specifications subject to change without prior notice

Industrial Air Drills - Composite Housing

- The tools feature an innovative and ergonomic composite housing and textured rubber grip that insulates against cold temperature and vibration and provides great comfort and controllability.
- The ZRD324 Air Drill features one-piece gear box structure that runs smoother and lasts longer.

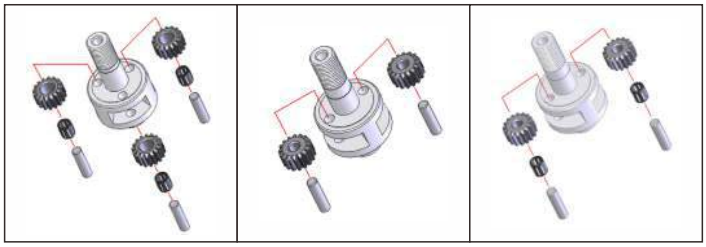

G3 G2 G2A

Gear box potions

- One-piece gearbox for heavy duty application.
- Combination gearbox for general application.

ZD322 0.5HP
3/8" Air Drill

ZD322P 0.5HP
3/8" Air Drill

ZD323 0.5HP
1/2" Air Drill

ZD323P 0.5HP
1/2" Air Drill

Model	Chuck Size inch(mm)	Spindle Thread	Free Speed rpm	Avg. Air Cons. cfm	Length inch(mm)	Net Weight lbs(kgs)
ZD322/ZD322P	3/8(10)	3/8"-24	2600	3.7	7.6(195)	2(0.9)
ZD323/ZD323P	1/2(13)	3/8"-24	900	3.7	9(230)	2.6(1.2)

- Min. Hose Size: 3/8(10)inch(mm)
- Air Inlet Size: 1/4" NPT/PT

Industrial Air Drills - Composite Housing

ZRD324 0.5HP
ZRD324D 0.5HP Feathering Control
3/8" Air Reversible Drill

ZRD324P 0.5HP
ZRD324DP 0.5HP Feathering Control
3/8" Air Reversible Drill

ZRD325 0.5HP
ZRD325D 0.5HP Feathering Control
1/2" Air Reversible Drill

ZRD325P 0.5HP
ZRD325DP 0.5HP Feathering Control
1/2" Air Reversible Drill

ZRD327 0.5HP
ZRD327D 0.5HP Feathering Control
1/2" Air Reversible Drill

ZRD327P 0.5HP
ZRD327DP 0.5HP Feathering Control
1/2" Air Reversible Drill

ZGD-D27-G1 Side Exhaust
5/8" Gear Type Air Drill-Outside trigger
ZGD-D20-G1 Side Exhaust
3/4" Gear Type Air Drill-Outside trigger

ZGD-D27-G1Z Side Exhaust
5/8" Gear Type Air Drill-Inside trigger
ZGD-D20-G1Z Side Exhaust
3/4" Gear Type Air Drill-Inside trigger

Model	Chuck Size inch(mm)	Spindle Thread	Free Speed rpm	Avg. Air Cons. cfm	Length inch(mm)	Net Weight lbs(kgs)	Min. Hose Size inch(mm)	Air Inlet Size inch-NPT/PT
ZRD324/324P/324D/324DP	3/8(10)	3/8"-24	1800	4	7.6(195)	2(0.9)	3/8(10)	1/4
ZRD325/325P/325D/325DP	1/2(13)	3/8"-24	450	4	9(230)	2.6(1.2)	3/8(10)	1/4
ZRD327/327P/327D/327DP	1/2(13)	3/8"-24	700	4	9(230)	2.6(1.2)	3/8(10)	1/4
ZGD-D27-G1/G1Z	5/8(16)	–	1000	15	16.54(420)	13.98(6.34)	–	3/8
ZGD-D20-G1/G1Z	3/4(19)	–	1000	15	17.2(437)	15.52(7.04)	–	3/8

- Recommended Gauge Air Pressure: 60~90psi

Products and specifications subject to change without prior notice

ZAD-3004P 1.0HP
3/8" Air Drill

ZAD-3004PC 1.0HP
3/8" Air Drill

ZAD-336 0.5HP
3/8" 90° Angle Air Drill

- The Angle Air Drill is ideal for drilling applications of restricted areas.
- The powerful air motor provides high power output and stall torque resistance.

Z26036-2
Rubber Eraser
3-8/15" x 7/12"

ZAD-356 / ZAD-376 0.5HP
3/8" Air Drill

- In-Line Drill is designed for low speed/high torque applications, such as drilling, sanding, and polishing.
- Keyless chuck comes with both ZAD-356 and ZAD-376.

ZAD-356P / ZAD-376P 0.5HP
3/8" Air Drill

- In-Line Drill is designed for low speed/high torque applications, such as drilling, sanding, and polishing.
- Keyless chuck comes with both ZAD-356P and ZAD-376P.

Z26036-7
Rubber Eraser
4" x 7/12"

Z26036-2
Rubber Eraser
3-8/15" x 7/12"

ZAE-371 / ZAE-3714 0.5HP
Air Eraser

- Smart Eraser is designed for every user to get rid of any kind of marks on the plastic plate or painted surface.
- The user can do the removal very fast and clear without any damages on the surface.
- The original painting will as like the original.

ZBT265A6026TB
Tire Buffer Metal Wheel

ZTB-383 0.5HP
Air Tire Buffer

- The Tire Buffer is ideal for general purpose tire buffering.
- Featuring high power and stall torque resistance makes the tire buffering easy and efficient.

ZP384 / ZP3843 0.5HP
Air Tire Buffer

- The Tire Buffer is ideal for general purpose tire buffering.
- Featuring high power and stall torque resistance makes the tire buffering easy and efficient.

Model	Chuck Size inch(mm)	Spindle Thread	Free Speed rpm	Avg. Air Cons. cfm	Length inch(mm)	Net Weight lbs(kgs)
ZAD-3004P	3/8(10)	–	22000	4.1	7.2(185)	1.5(0.7)
ZAD-336	3/8(10)	3/8"-24	1800	3.7	7.6(195)	2(0.9)
ZAD-356/356P	3/8(10)	3/8"-24	2600	3.7	8.8(225)	1.8(0.8)
ZAD-376/376P	3/8(10)	3/8"-24	3600	3.7	8.8(225)	1.8(0.8)
ZAE-371/3714	–	5/16"-24	2600/3600	3.7	8.8(225)	1.8(0.8)
ZTB-383	–	5/16"-24	2600	3.7	8.8(225)	1.8(0.8)
ZP384/3843	–	3/8"-24	2600/3600	3.5	8.8(225)	1.8(0.8)

- Min. Hose Size: 3/8(10)inch(mm)
- Air Inlet Size: 1/4" NPT/PT

Air Angle Eraser

Benefits

- Superior Ergonomics.
- Easy to use & offer greater visibility on work surface.
- Safety & Convenience.
- Powerful at 1.0 hp.
- Durable.
- Specially tool developed for the removal of pinstripes, Car Decals and Stickers, double faced tapes.

Features

- High quality alloy steel's bevel gear with precision teeth design for tool performance durable & longevity.
- Spindle lock button feature allows for faster eraser wheel
- changeovers.
- Fully adjustable side handle.
- 4" Eraser Wheel with eraser wheel hub for secured fastened on spindle & more stable operation.
- Eraser wheel's pad as spiral oriented design as running direction for smoothly removal operation.
- 5/16"-24 spindle female thread.
- 1.0hp motor & 2400 rpm free speed.

ZAE-30836E 1.0HP
Air Angle Eraser

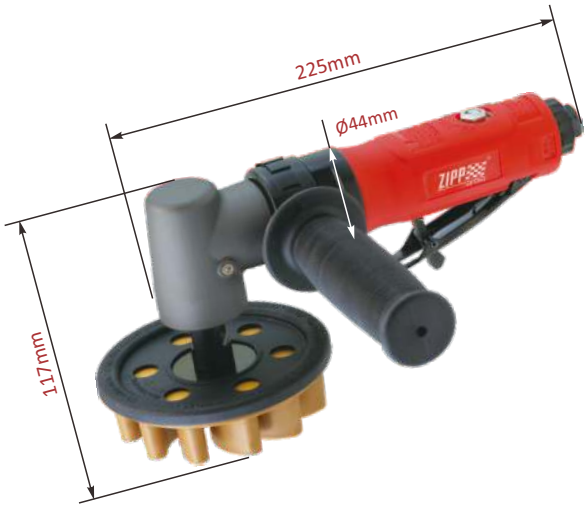

ZAE-3308E 0.5HP
Air Angle Eraser

180° Rotational handle

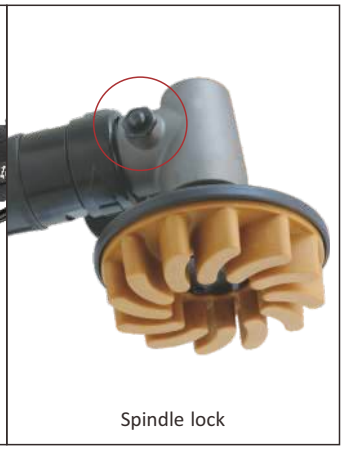

Spindle lock

ZST-BT29756-1
Eraser Wheel Hub

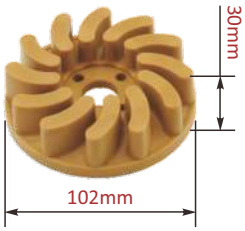

ZBT29756
Eraser Wheel
4"(102mm)

Model	Spindle Thread	Free Speed rpm	Avg. Air Cons. cfm	Length inch(mm)	Net Weight lbs(kgs)	Min. Hose Size inch(mm)	Air Inlet Size inch-NPT/PT
ZAE-30836E	5/16"-24	2400	4.1	8.8(225)	3.1(1.4)	3/8(10)	1/4
ZAE-3308E	5/16"-24	2400	3.5	8.8(225)	2.2(1)	3/8(10)	1/4

Products and specifications subject to change without prior notice

0.3HP Industrial Right Angle Air Drills

ZD2328 / ZD2328L

Threaded type | 0.3HP

90° Industrial Angle Drill

ZD2329 / ZD2329L

Threaded type | 0.3HP

45° Industrial Angle Drill

ZD2331 / ZD2331L

Chuck type | 0.3HP

90° Industrial Angle Drill

ZD2320 / ZD2320L

Chuck type | 0.3HP

45° Industrial Angle Drill

ZD2349 / ZD2349L

Collet type | 0.3HP

90° Industrial Angle Drill

- 2.4, 2.5, 3.0, 3.1, 3.2, 4.5, 4.6, 5.8 & 5.9 mm collet will be supply with each tool

ZD2340 / ZD2340L

Collet type | 0.3HP

45° Industrial Angle Drill

- 2.4, 2.5, 3.0, 3.1, 3.2, 4.5, 4.6, 5.8 & 5.9 mm collet will be supply with each tool

Model	Chuck/Collet Capacity inch(mm)	Spindle Thread	Free Speed rpm	Avg. Air Cons. cfm	Noise Level db(A)	Vibration m/s²	Overall Length mm	Net Weight lbs(kgs)	
ZD2328	–	1/4"-28	4000	3(84)	81.5	<2.5	240	1.4(0.64)	Two Gear Mechanism
ZD2328L	–	1/4"-28	4000	3(84)	81.5	<2.5	308	1.65(0.75)	
ZD2329	–	1/4"-28	4000	3(84)	81.5	<2.5	256	1.4(0.64)	
ZD2329L	–	1/4"-28	4000	3(84)	81.5	<2.5	333	1.65(0.75)	
ZD2331	1/8(3)	–	4000	3(84)	81.5	<2.5	240	1.4(0.64)	
ZD2331L	1/8(3)	–	4000	3(84)	81.5	<2.5	308	1.65(0.75)	
ZD2320	1/8(3)	–	4000	3(84)	81.5	<2.5	256	1.4(0.64)	
ZD2320L	1/8(3)	–	4000	3(84)	81.5	<2.5	333	1.65(0.75)	
ZD2349	(2.4~5.9)	–	4000	3(84)	81.5	<2.5	240	1.4(0.64)	
ZD2349L	(2.4~5.9)	–	4000	3(84)	81.5	<2.5	308	1.65(0.75)	
ZD2340	(2.4~5.9)	–	4000	3(84)	81.5	<2.5	256	1.4(0.64)	
ZD2340L	(2.4~5.9)	–	4000	3(84)	81.5	<2.5	333	1.65(0.75)	

- Exhaust Type: Adjust Side Exhaust
- Min. Hose Size: 3/8(10)inch(mm)
- Air Inlet Size: 1/4" NPT/PT

0.5HP Industrial Right Angle Air Drills

ZD2333 / ZD2333L

Threaded type | 0.5HP

90° Industrial Angle Drill

ZD2332 / ZD2332L

Threaded type | 0.5HP

45° Industrial Angle Drill

ZD2335 / ZD2335L

Chuck type | 0.5HP

90° Industrial Angle Drill

ZD2334 / ZD2334L

Chuck type | 0.5HP

45° Industrial Angle Drill

ZD2352 / ZD2352L

Collet type | 0.5HP

90° Industrial Angle Drill

- 2.4, 2.5, 3.0, 3.1, 3.2, 4.5, 4.6, 5.8 & 5.9 mm collet will be supply with each tool

ZD2351 / ZD2351L

Collet type | 0.5HP

45° Industrial Angle Drill

- 2.4, 2.5, 3.0, 3.1, 3.2, 4.5, 4.6, 5.8 & 5.9 mm collet will be supply with each tool

Model	Chuck/Collet Capacity inch(mm)	Spindle Thread	Free Speed rpm	Avg. Air Cons. cfm	Noise Level db(A)	Vibration m/s²	Overall Length mm	Net Weight lbs(kgs)	
ZD2333	–	1/4"-28	3600	3.5(99)	82	<2.5	259	1.9(0.86)	Two Gear Mechanism
ZD2333L	–	1/4"-28	3600	3.5(99)	82	<2.5	327	2.2(1)	
ZD2332	–	1/4"-28	3600	3.5(99)	82	<2.5	274	1.9(0.86)	
ZD2332L	–	1/4"-28	3600	3.5(99)	82	<2.5	351	2.2(1)	
ZD2335	1/8(3)	–	3600	3.5(99)	82	<2.5	259	1.9(0.86)	
ZD2335L	1/8(3)	–	3600	3.5(99)	82	<2.5	327	2.2(1)	
ZD2334	1/8(3)	–	3600	3.5(99)	82	<2.5	274	1.9(0.86)	
ZD2334L	1/8(3)	–	3600	3.5(99)	82	<2.5	351	2.2(1)	
ZD2352	(2.4~5.9)	–	3600	3.5(99)	82	<2.5	259	1.9(0.86)	
ZD2352L	(2.4~5.9)	–	3600	3.5(99)	82	<2.5	327	2.2(1)	
ZD2351	(2.4~5.9)	–	3600	3.5(99)	82	<2.5	274	1.9(0.86)	
ZD2351L	(2.4~5.9)	–	3600	3.5(99)	82	<2.5	351	2.2(1)	

- Exhaust Type: Adjust Side Exhaust
- Min. Hose Size: 3/8(10)inch(mm)
- Air Inlet Size: 1/4" NPT/PT

Products and specifications subject to change without prior notice

Angle Drill Attachments

ZD90T

Threaded type

- Spindle Thread: 1/4"-28

ZD90TL

Threaded type

- Spindle Thread: 1/4"-28

ZD45T

Threaded type

- Spindle Thread: 1/4"-28

ZD45TL

Threaded type

- Spindle Thread: 1/4"-28

ZD90CH

Chuck type

- Chuck Capacity: 1/8(3) inch(mm)

ZD90CHL

Chuck type

- Chuck Capacity: 1/8(3) inch(mm)

ZD45CH

Chuck type

- Chuck Capacity: 1/8(3) inch(mm)

ZD45CHL

Chuck type

- Chuck Capacity: 1/8(3) inch(mm)

ZD90C

Collet type

- Collet Capacity: (2.4~5.9) inch(mm)
- 2.4, 2.5, 3.0, 3.1, 3.2, 4.5, 4.6, 5.8 & 5.9 mm collet will be supply with each attachment

ZD90CL

Collet type

- Collet Capacity: (2.4~5.9) inch(mm)
- 2.4, 2.5, 3.0, 3.1, 3.2, 4.5, 4.6, 5.8 & 5.9 mm collet will be supply with each attachment

ZD45C

Collet type

- Collet Capacity: (2.4~5.9) inch(mm)
- 2.4, 2.5, 3.0, 3.1, 3.2, 4.5, 4.6, 5.8 & 5.9 mm collet will be supply with each attachment

ZD45CL

Collet type

- Collet Capacity: (2.4~5.9) inch(mm)
- 2.4, 2.5, 3.0, 3.1, 3.2, 4.5, 4.6, 5.8 & 5.9 mm collet will be supply with each attachment

Air Die Grinder / Air Angle Die Grinder

- Ergonomic cushion-grip handle-Insulates against cold temperature in the hand, helps ease user fatigue, and insulates against vibration.
- Power/Speed Regulator-Allows for easy rpm adjustment.
- Rear exhaust-Directs the exhaust away from the user and the working areas.
- Twin-Bearing Spindle-This quality design results in super precise spindle concentricity less than 0.05mm and minimal vibration.

ZDG-231 0.3HP

Mini Air Die Grinder

- The ZDG-231 Mini Die Grinder is suitable for light weld grinding, porting and polishing applications. If features a spindle concentricity less than 0.05mm.

ZDG-2319 0.3HP

Medium Speed Mini Air Die Grinder

- Low profile for grinding restricted areas.
- Light weight for fatigue free use.
- Medium speed for specific grinding accessories.

ZDG-231K Mini Die Grinder Tool Kit

Specifications:
- 1 pc Die Grinder
- 2 pcs Spanners
- 5 pcs 1/4" Shank Grinding Stones
- 5 pcs 1/8" Shank Grinding Stones
- 1 pc 1/8" Collet
- 1 pc Nipple
- 1 pc Blow Case

ZDG-231AL 0.3HP

3" Extension Mini Air Die Grinder

ZDG-236 0.3HP

Mini Air Angle Die Grinder

- The ZDG-236 Mini Angle Die Grinder allows easy handling in confined areas, and is capable of using carbide burrs and other attachments for polishing, porting, and light metal removal.

ZDG-236K Mini Angle Die Grinder Tool Kit

Specifications:
- 1 pc Angle Die Grinder
- 1 pc 2" Roloc Pad
- 5 pcs 2" Roloc Scotch Discs
- 1 pc 1/8" Collet
- 1 pc Nipple
- 2 pcs Spanners
- 5 pcs 1/8" Shank Grinding Stones
- 5 pcs 1/4" Shank Grinding Stones
- 1 pc Blow Case

ZDG-231L 0.3HP

5" Extension Mini Air Die Grinder

Model	Collet Size inch(mm)	Free Speed rpm	Avg. Air Cons. cfm	Length inch(mm)	Net Weight lbs(kgs)	Min. Hose Size inch(mm)	Air Inlet Size inch-NPT/PT
ZDG-231	1/4(6)	25000	3	6.1(155)	0.9(0.4)	3/8(10)	1/4
ZDG-236	1/4(6)	20000	3	6.1(155)	1.1(0.5)	3/8(10)	1/4
ZDG-2319	1/4(6)	7600	3	7.3(185)	1.3(0.6)	3/8(10)	1/4
ZDG-231AL	1/4(6)	25000	2.6	8.6(220)	1.3(0.5)	3/8(10)	1/4
ZDG-231L	1/4(6)	25000	2.6	10.1(259)	1.5(0.7)	3/8(10)	1/4

Products and specifications subject to change without prior notice

Industrial Air Die Grinder / Air Angle Grinder

ZDG-S215 0.3HP
Industrial 1/4" Air Die Grinder

- High power, efficient motor for heavy grinding works.
- Side exhaust.

ZDG-S24B 0.3HP
Industrial 1/4" Air Die Grinder

- Roll type throttle.
- Compact and durable steel housing for long service life.

Model	Size of Collet inch(mm)	Free Speed rpm	Avg. Air Cons. cfm(l/min)	Overall Length inch(mm)	Net Weight lbs(kgs)	Min. Hose Size inch(mm)	Air Inlet Size inch-NPT/PT
ZDG-S215	1/4(6)	24000	7.8(220)	6-11/16(170)	1.46(0.66)	3/8(10)	1/4
ZDG-S24B	1/4(6)	24000	7.8(220)	7-3/64(179)	1.7(0.77)	3/8(10)	1/4

- Operating Air Pressure: 90psi/6.2bar

ZAG213A 0.3HP
Air Angle Grinder

ZAG213B 0.3HP
Air Angle Grinder

ZAG213AF 0.3HP
Air Angle Grinder

ZAG213BF 0.3HP
Air Angle Grinder

Model	Grinding Wheel inch(mm)	Free Speed rpm	Avg. Air Cons. cfm(l/min)	Overall Length inch(mm)	Net Weight lbs(kgs)	Min. Hose Size inch(mm)	Air Inlet Size inch-NPT/PT
ZAG213A	2(50)	15000	7.8(220)	6-3/16(157)	1.46(0.66)	3/8(10)	1/4
ZAG213B	2(50)	15000	6.7(190)	7-13/32(188)	1.64(0.74)	3/8(10)	1/4
ZAG213AF	1/4(6)	15000	7.8(220)	6-3/16(157)	1.44(0.65)	3/8(10)	1/4
ZAG213BF	1/4(6)	15000	6.7(190)	7-13/32(188)	1.61(0.73)	3/8(10)	1/4

- Operating Air Pressure: 90psi/6.2bar

Air Die Grinder / Air Angle Die Grinder

ZP313 0.5HP
Low Noise Air Die Grinder

- The ZP313 Die Grinder is suitable for many automotive and industrial high speed grinding applications.
  The grinder can be used to clean dies, rotors . backing plates and brake pad mounts.
- Grind valve seats, dress welds and enlarge holes.
- Can use with 1/4"(6mm) or 1/8"(3rrm) grinding.

ZP313K Low Noise Air Die Grinder Kit

Specifications:
- 1 pc Die Grinder
- 2 pcs Spanners
- 5 pcs 1/4" Shank Grinding Stones
- 5 pcs 1/8" Shank Grinding Stones
- 1 pc 1/8" Collet
- 1 pc Nipple
- 1 pc Blow Case

- In-Line Die Grinder is designed for low speed application.
- Can use with 1/4"(6mm) or 1/8"(3mm) grinding accessories.

ZDG-356A / ZDG-376A 0.5HP
Low Speed, Low Noise Air Die Grinder

ZST-200E-29
6mm COLLET
ZST-200E-29-1
1/4" COLLET

ZDG-376AL 0.5HP
Low Speed Air Extension Die Grinder

- The die grinder come with 1/4"(6mm) or 3/8"(8mm) double angle collets for industrial application.

ZP314 0.5HP
Low Noise 3" Air Extension Die Grinder

- Extension Die Grinder is designed for high speed grinding and polishing in hard-to-reach areas.
- Features an extended reach of 3".
- By using 1/4"(6mm) or 1/8"(3mm) grinding accessories, the grinder can be used in a wide range of grinding and polishing applications.

ZP315 0.5HP
Low Noise 5" Air Extension Die Grinder

- Extension Die Grinder is designed for high speed grinding and polishing in hard-to-reach areas.
- Features an extended reach of 5".
- By using 1/4"(6mm) or 1/8"(3mm) grinding accessories, the grinder can be used in a wide range of grinding and polishing applications.

ZP319 0.5HP
Low Noise Air Angle Die Grinder

- The ZP319 Angle Die Grinders are ideal for high speed grinding and polishing.
- It can be used in finishing dies and metal molds, smoothing and shaping sheet metal and cast iron, weld finishing and other high speed polishing applications.
- Can use with 1/4"(6mm) or 1/8"(3mm) grinding accessories.

ZP319K Low Noise Air Angle Die Grinder Kit

Specifications:
- 1 pc Angle Die Grinder
- 5 pcs 2" Roloc Scotch Discs
- 5 pcs 3" Roloc Scotch Discs
- 1 pc 1/8" Collet
- 1 pc Nipple
- 2 pcs Spanners
- 5 pcs 1/8" Shank Grinding Stones
- 5 pcs 1/4" Shank Grinding Stones
- 1 pc Blow Molded Case
- 2 pcs Roloc Pad
- 2 pcs Bolts

ZDG-3226 0.5HP
Low Noise 115° Air Angle Die Grinder

- The ZDG-3226 Angle Die Grinders are ideal for high speed grinding and polishing.
- It can be used in finishing dies and metal molds, smoothing and shaping sheet metal and cast iron, weld finishing and other high speed polishing applications.
- Can use with 1/4"(6mm) or 1/8"(3mm) grinding accessories.

ZAG-341 0.5HP
Low Noise 2" Air Angle Grinder

- The Angle Grinder features versatile application for grinding, including depressed disc.

ZBT288544-2GD060
(#60Grit), 2" DISC WHEEL

Model	Collet Size inch(mm)	Free Speed rpm	Avg. Air Cons. cfm	Length inch(mm)	Net Weight lbs(kgs)	Min. Hose Size inch(mm)	Air Inlet Size inch-NPT/PT
ZP313	1/4(6)	22000	3.7	7(178)	1.3(0.6)	3/8(10)	1/4
ZDG-356A/376A	1/4(6)	2600/3600	3.7	7.8(200)	1.5(0.7)	3/8(10)	1/4
ZDG-376AL	1/4(6)	3600	3.5	12(305)	2.2(1)	3/8(10)	1/4
ZP314	1/4(6)	22000	3.7	9.4(240)	1.5(0.7)	3/8(10)	1/4
ZP315	1/4(6)	22000	3.7	11(280)	1.8(0.8)	3/8(10)	1/4
ZP319/ZDG-3226	1/4(6)	18000	3.7	7(178)	1.5(0.7)	3/8(10)	1/4
ZAG-341	Grinding Wheel 2"	15000	3.5	7(178)	1.5(0.7)	3/8(10)	1/4

Products and specifications subject to change without prior notice

Super Power Air Tools

- 0.9HP and 1HP air grinders come with 1/4"(6mm) or 3/8" (8mm) double angle collets for industrial application.

ZST-200E-29
6mm COLLET
ZST-200E-29-1
1/4" COLLET

ZDG-301 0.9HP

Air Die Grinder

- The ZDG-301 Die Grinder is suitable for many automotive and industrial high speed grinding applications. The grinder can be used to clean dies, rotors, backing plates and brake pad mounts.
- Grind valve seats, dress welds and enlarge holes.
- Can use with 1/4"(6mm) or 1/8"(3mm) grinding accessories.

ZDG-302 0.9HP

Air Angle Die Grinder

- The ZDG-302 Angle Die Grinder is ideal for high speed grinding and polishing.
- It can be used in finishing dies and metal molds, smoothing and cast iron, weld finishing and other high speed polishing application.
- Can use with 1/4"(6mm) or 1/8"(3mm) grinding accessories.

ZDG-301AL 1.0HP

3.5" Air Extension Die Grinder

- Extension Die Grinder is designed for high speed grinding and polishing in hard-to-reach areas.
- Features an extended reach of 3.5".
- By using 1/4"(6mm) or 1/8"(3mm) grinding accessories, the grinder can be used in a wide range of grinding and polishing applications.

ZDG-301L 1.0HP

5.5" Air Extension Die Grinder

- Extension Die Grinder is designed for high speed grinding and polishing in hard-to-reach areas.
- Features an extended reach of 5.5".
- By using 1/4"(6mm) or 1/8"(3mm) grinding accessories, the grinder can be used in a wide range of grinding and polishing applications.

Model	Collet Size inch(mm)	Free Speed rpm	Avg. Air Cons. cfm	Length inch(mm)	Net Weight lbs(kgs)	Min. Hose Size inch(mm)	Air Inlet Size inch-NPT/PT
ZDG-301	1/4(6)	23000	4.1	7(180)	1.4(0.5)	3/8(10)	1/4
ZDG-302	1/4(6)	18000	4.1	7(180)	1.8(0.8)	3/8(10)	1/4
ZDG-301AL	1/4(6)	22000	4.1	9.4(240)	1.8(0.8)	3/8(10)	1/4
ZDG-301L	1/4(6)	22000	4.1	11(280)	2(0.9)	3/8(10)	1/4

1HP Extended Die Grinders

ZDG-301L300 1.0HP
ZDG-3076L300 1.0HP
12" Air Extension Die Grinder

ZDG-301L500 1.0HP
ZDG-3076L500 1.0HP
21-3/8" Air Extension Die Grinder

ZDG-301L800 1.0HP
ZDG-3076L800 1.0HP
31-1/2" Air Extension Die Grinder

ZST-200E-29 6mm COLLET
ZST-200E-29-2 8mm COLLET
ZST-200E-29-1 1/4" COLLET
ZST-200E-29-4 3/8" COLLET

Benefits

- Industrial extended shaft long die grinder design for high speed grinding& polishing in hard-to-reach areas
- By using 1/4"(6mm) or 3/8"(8mm) Double Angle Collets, the die grinder can be used in a wide range of grinding and polishing applications with various wheels
- 4000rpm models are excellent for grinding applications with flap sanding wheel
- High productivity
- Highest durability in demanding applications

Features

- 12" (305 mm), 21-3/8" (543 mm), 31-1/2" (800 mm) extended body by Aluminum alloy structure.
- Comfort grip over-housing
- Streamlined safety lever
- Rear exhaust
- 1/4" (6mm) & 3/8" (8mm) industrial grade Double Angle collet holder
- 1.0 hp motor
- 22000 rpm free speed models and 3500 rpm free speed models

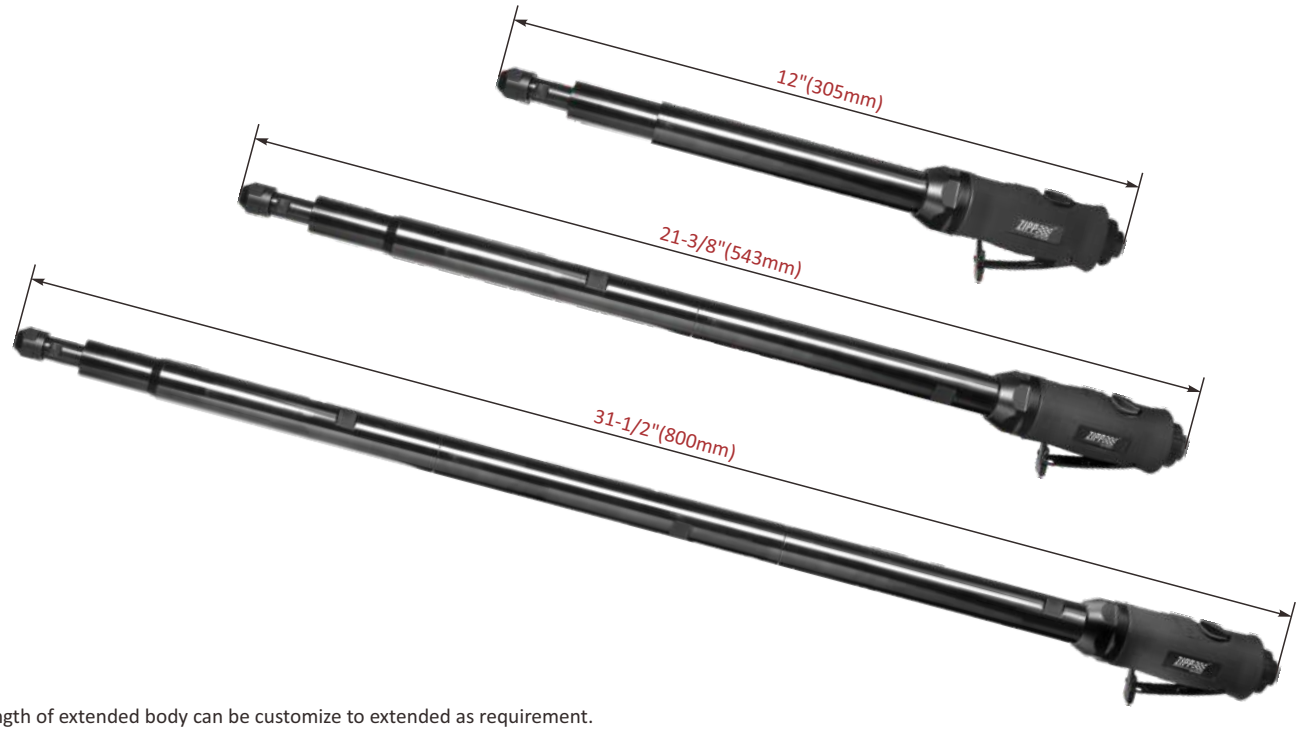

* The length of extended body can be customize to extended as requirement.

Model	Collet Size inch(mm)	Free Speed rpm	Avg. Air Cons. cfm	Length inch(mm)	Net Weight lbs(kgs)	Min. Hose Size inch(mm)	Air Inlet Size inch-NPT/PT
ZDG-301L300	1/4(6)	22000	4.2	17.5(445)	2.9(1.3)	3/8(10)	1/4
ZDG-301L500	1/4(6)	22000	4.2	27(688)	3.9(1.8)	3/8(10)	1/4
ZDG-301L800	1/4(6)	22000	4.2	37.1(943)	4.9(2.2)	3/8(10)	1/4
ZDG-3076L300	1/4(6)	3500	4.2	18.7(477)	3.5(1.6)	3/8(10)	1/4
ZDG-3076L500	1/4(6)	3500	4.2	28.3(719)	4.5(2)	3/8(10)	1/4
ZDG-3076L800	1/4(6)	3500	4.2	38.3(974)	5.5(2.5)	3/8(10)	1/4

Products and specifications subject to change without prior notice

Industrial Air Die Grinder

ZDG-S220 0.8HP

Industrial 1/4" Air Die Grinder

- Can be used as sander for expandable / flap wheels, brushes.

ZDG-S216 0.8HP

Industrial 1/4" Air Die Grinder

- With 360° rotating rear exhaust muffler Safety Trigger.
- Use for heavy grinding works.

ZDG-S206 0.8HP

Industrial 1/4" Air Die Grinder

- Can be used as sander for expandable / flap wheels, brushes.

ZDG-S235 0.8HP

Industrial 1/4" Air Die Grinder

- Can be used as sander for expandable / flap wheels, brushes.

24182-10 3/8"-24 / 24182-13 1/2"-20

Optional combo arbor (interchange with # 24182 arbor set) with 1/2"-20 or 3/8"-24 female thread for up to 3" wide wheels with 5/8" or 1" diameter center hole for use on model# ZDG-S220, ZDG-S206 & ZDG-S235 grinders.

Model	Collet Size inch(mm)	Free Speed rpm	Avg. Air Cons. cfm (l/min)	Overall Length inch(mm)	Net Weight lbs(kgs)	Min. Hose Size inch(mm)	Air Inlet Size inch-NPT/PT
ZDG-S220	1/4(6)	2200	5(141)	8-5/8(220)	2(0.92)	3/8(10)	1/4
ZDG-S216	1/4(6)	15000	5(141)	8(200)	1.8(0.8)	3/8(10)	1/4
ZDG-S206	1/4(6)	600	5(141)	10(250)	2.6(1.2)	3/8(10)	1/4
ZDG-S235	1/4(6)	3500	5(141)	8-5/8(220)	2(0.92)	3/8(10)	1/4

- Operating Air Pressure: 90psi/6.2bar

Micro Die Grinder

ZPD327

0.3HP | Rear Exhaust

Micro Die Grinder

ZPD212

0.12HP | Rear Exhaust

Micro Die Grinder

ZPD312

0.12HP | Rear Exhaust

Micro Die Grinder

ZPD412

0.15HP | Rear Exhaust

Micro Die Grinder

ZPD322

0.12HP | Rear Exhaust

90° Air Micro Grinder

ZPD323

0.12HP | Rear Exhaust

120° Air Micro Grinder

Model	Collet Size inch(mm)	Free Speed rpm	Air Cons. l/min	Air Pressure kg(cm²)	Tool Dimension mm	Tool Length mm	Hose Length mm	Net Weight kg
ZPD327	1/4(6)	30000	300	6	26.5	150	1500	0.3
ZPD212	1/8(3)	60000	180	6	17	140	1500	0.24
ZPD312	3mm	60000	180	6	18	125	1500	0.24
ZPD412	1/8(3)	70000	180	6	17	140	1500	0.13
ZPD322	3mm	22000	240	6	–	140	1500	0.345
ZPD323	3mm	22000	240	6	–	140	1500	0.355

- Air Inlet Size: 1/4" NPT/PT

Products and specifications subject to change without prior notice

Angle Cutter / Air Nibbler

ZP219 0.5HP
Air Nibbler

Benefits

- Easy to operate and control
- Perfect for accurate cutting and best for tight corners and circles
- Used for nibbling plastic, tin, aluminum and others metals original
- Ideal for paint and auto body shops, tinsmiths, and sheet metal shops

Features

- 4.5mm diameter punch cuts rolled steel sheet up to 0.0478"/1.2mm (18 gauge) and aluminum up to 0.064"/1.628mm (14 gauge).
- The nibbler is capable of cutting 4.5mm in radius with accuracy and without distorted edges.
- Easy access to punch and die for quick replacement.
- Balanced, lightweight tool.

ZBT25134-3GD
3" Disc Wheel
(3" x 3/8 x 1/16")

ZP250 0.5HP
Low Noise Air Cutter

- The 3" Cutter is ideal for a wide range of cutting applications.

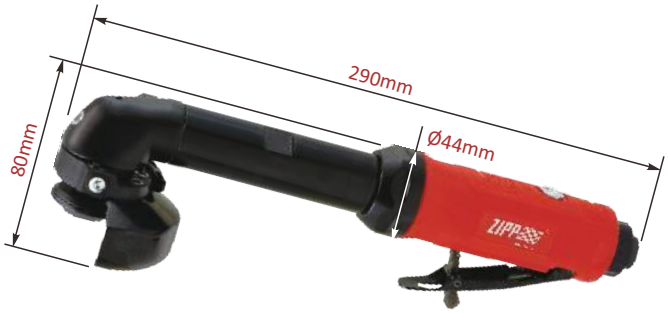

ZAC-354L 0.5HP
3" Extended Air Angle Cutter

ZAC-354 0.5HP
3" Air Angle Cutter

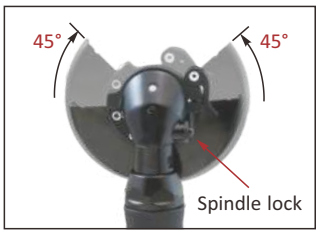

ZAC-304 0.9HP
3" Air Angle Cutter

Model	Grinding Wheel	Cutting Capacity Steel	Cutting Capacity Aluminum	Free Speed rpm	Avg. Air Cons. cfm	Length inch(mm)	Net Weight lbs(kgs)
ZP219	–	1.2mm	1.6mm	2600	3.7	7.2(185)	2.2(1)
ZAC-354	Cutting Wheel 3"	–	–	16000	3.5	8.6(220)	2.7(1.2)
ZAC-354L	Cutting Wheel 3"	–	–	16000	3.5	11.4(290)	2.9(1.3)
ZAC-304	Cutting Wheel 3"	–	–	16000	4.1	8.6(220)	2.9(1.3)
ZP250	Cutting Wheel 3"	–	–	21000	3.5	7.6(195)	1.8(0.8)

- Min. Hose Size: 3/8(10)inch(mm)
- Air Inlet Size: 1/4" NPT/PT

ZAG-306B

1.0HP | Spindle Thread 5/8"-11

ZAG-306BM

1.0HP | Spindle Thread M14x2P

4" Air Angle Grinder & Cutter

ZAG-30656B

1.0HP | Spindle Thread 5/8"-11

ZAG-30656BM

1.0HP | Spindle Thread M14x2P

4-1/2" Air Angle Grinder & Cutter

Benefits

- Compact head design.
- Superior Ergonomics.
- Easy to Use.
- Safety & Convenience.
- Powerful at 1.0 hp.
- Durable.
- Ideal for a variety of applications such as sanding with flap discs, grinding especially in tight spaces.

Features

- High quality alloy steel's bevel gear with precision teeth design for tool performance durable & longevity.
- Spindle lock button feature allows for faster grinding wheel changeovers.
- 9 position adjustable swivel guard-120° adjustable for better operator protection & greater visibility of cutting operations.
- 4" (100mm) & 4.5" (115 mm) wheel capacity.
- 5/8"-11 & M14 x 2P spindle thread.
- 1.0hp motor & 11000 rpm free speed.

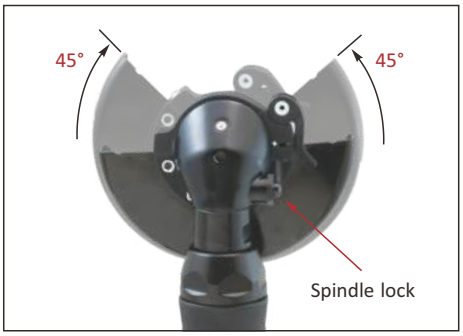

Model	Grinding Wheel	Free Speed rpm	Avg. Air Cons. cfm	Length inch(mm)	Net Weight lbs(kgs)	Min. Hose Size inch(mm)	Air Inlet Size inch-NPT/PT
ZAG-306B	4"	11000	4.1	8.7(220)	2.2(1)	3/8(10)	1/4
ZAG-306BM	4"	11000	4.1	8.7(220)	2.2(1)	3/8(10)	1/4
ZAG-30656B	4-1/2"	11000	4.1	8.7(220)	2.2(1)	3/8(10)	1/4
ZAG-30656BM	4-1/2"	11000	4.1	8.7(220)	2.2(1)	3/8(10)	1/4

Products and specifications subject to change without prior notice

Extended Air Cutter

ZAC-30540 1.0HP
4" Extended Air Cutter

ZAC-305640 1.0HP
4-1/2" Extended Air Cutter

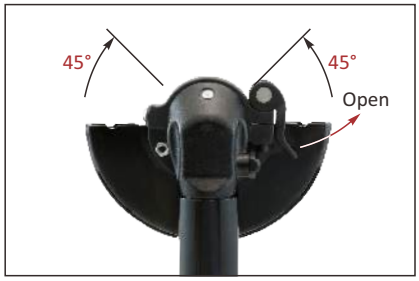

Benefits

- Extended Length & Compact Gear Housing at height 39mm
- Ergonomic Grip
- Easy to Use
- Safety & Convenient
- Powerful at 1.0hp
- Durable
- Ideal for cutting composite, metal, exhaust pipes, hangers, body panels, hoses, and U-bolts, ... especially in tight spaces

Features

- Cutting disc size: 4"/100mm, 4-1/2''/115 mm
- 7" = 180mm for better reach and easy access to restricted areas
- Composite ergonomic grip to reduce cold air transmission to operators
- Spindle lock system for easier wheel changing
- 9 position adjustable swivel guard - 120° adjustable for better operator protection & greater visibility of cutting operations
- Built-in speed regulator for easy adjustment
- Safety throttle lever to prevent accidental start up
- Rear exhaust with low noise
- 1 HP motor & 14000 rpm
- High quality bearing (larger bearing size) for better support internal gears
- High quality alloy steel for spiral bevels gears with precision teeth design for tool longevity

Model	Grinding Wheel	Free Speed rpm	Avg. Air Cons. cfm	Length inch(mm)	Net Weight lbs(kgs)	Min. Hose Size inch(mm)	Air Inlet Size inch-NPT/PT
ZAC-30540	4"	14000	4.1	13.6(345)	3.2(1.4)	3/8(10)	1/4
ZAC-305640	4-1/2"	14000	4.1	13.6(345)	3.2(1.4)	3/8(10)	1/4

Air Angle Grinders

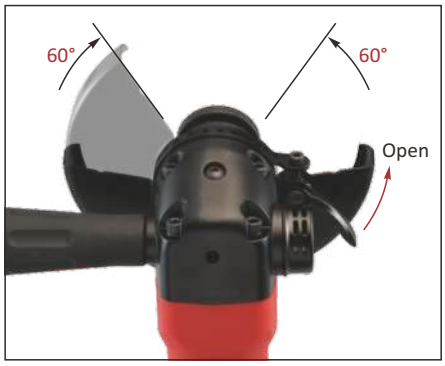

ZBT80541
5" Disc Wheel
5"x1/4"x7/8"

ZP321R 1.2HP 100° 4" Heavy Duty Grinder
ZP322R 1.2HP 100° 4-1/2" Heavy Duty Grinder
ZP323R 1.2HP 100° 5" Heavy Duty Grinder

The trigger can be opened and adjust the shroud up to 55° so as to avoid from the hurt during operating

ZAG-965R 1.3HP 4" Angle Grinder
ZAG-9656R 1.3HP 4-1/2" Angle Grinder
ZAG-966R 1.3HP 5" Angle Grinder

- 1.3 HP Motor for stall resistance.
- Safety lock-off throttle lever.
- One piece housing reduces maintenance costs.
- Heavy duty air cooled spiral gears and double bearings for durability.
- Ergonomic composite grip for comfort and reduced vibration.
- ANSI compliance wheel guard design.

Best for: Continuous use, heavy duty surface preparation, and material removal.

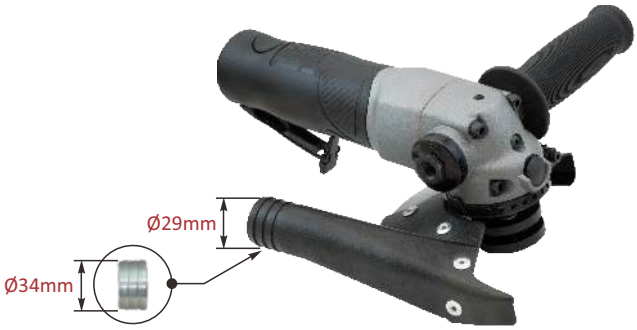

ZAG-966C 1.3HP
5" H.D. Angle Grinder With Central Vacuum Wheel Guard

Model	Grinding Wheel	Grinding Wheel	Free Speed rpm	Avg. Air Cons. cfm	Length inch(mm)	Net Weight lbs(kgs)	Min. Hose Size inch(mm)	Air Inlet Size inch-NPT/PT
ZP321R	3/8"-24, M10x1.5	4"	10000	3.5	8.2(210)	3.1(1.4)	3/8(10)	1/4
ZP322R	5/8"-11, M14x2	4-1/2"	10000	3.5	8.2(210)	3.1(1.4)	3/8(10)	1/4
ZP323R	5/8"-11, M14x2	5"	10000	3.5	8.2(210)	3.1(1.4)	3/8(10)	1/4
ZAG-965R	3/8"-24, M10x1.5	4"	11000	3.8	9(230)	4(1.8)	3/8(10)	1/4
ZAG-9656R	5/8"-11, M14x2	4-1/2"	11000	3.8	9(230)	4(1.8)	3/8(10)	1/4
ZAG-966R	5/8"-11, M14x2	5"	11000	3.8	9(230)	4(1.8)	3/8(10)	1/4
ZAG-966C	5/8"-11, M14x2	5"	11000	3.8	9(230)	4(1.8)	3/8(10)	1/4

Products and specifications subject to change without prior notice

Air Cut-Off Tool

Features

- Low Vibration & Ergonomic handle design.
- Easy access to changing discs.

ZAG-386 0.5HP
3" Air Cut Off Tool

ZAG-387 0.7HP
4" Air Cut Off Tool

Model	Capacity Size PAD	Horse Power HP	Free Speed rpm	Avg. Air Cons. cfm	Overall Length mm	Net Weight kg	Air Pressure kg/cm²	Air Inlet Size inch-NPT/PT
ZAG-386	3"	0.82	18000	4	225x115x105	0.83	6.3	1/4
ZAG-387	4"	0.8	14000	4.5	240x105x125	0.93	6.3	1/4

Reversible Air Tools

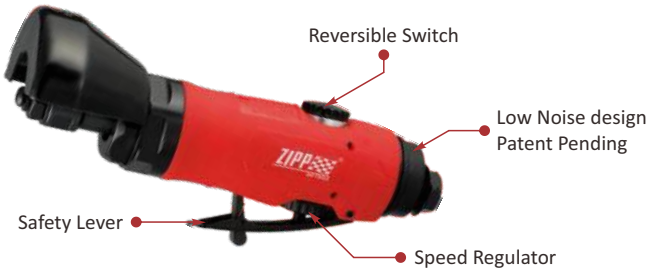

ZRD368 0.7HP
3/8" 90° Angle Air Reversible Drill

ZRC-361R 0.7HP
3" Reversible Air Cutter

- Directs sparks away for personal safety.
- Reversible cutting providing powerful cutting application.
- Best cutting tool for restricted areas.

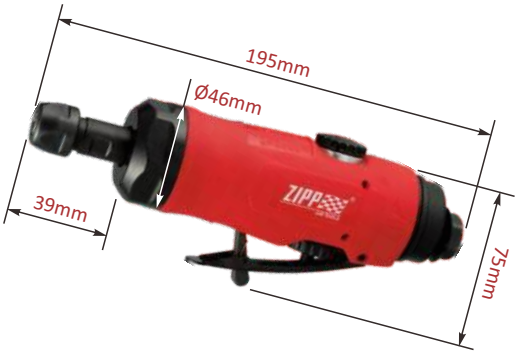

ZRDG-363 0.7HP
Reversible Air Die Grinder

- Directs sparks away for personal safety.
- Reversible grinding for versatility.

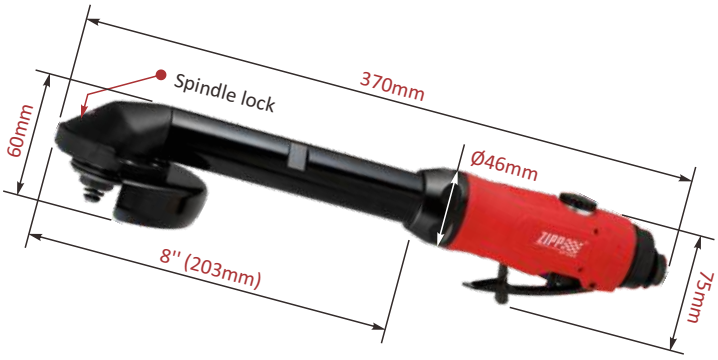

ZRAC-365B 0.7HP
4" Extended Reversible Air Axial Cutter

- Directs sparks away for personal safety.
- Excellent for hard to reach areas.
- Low profile for restricted area applications.
- Versatile cutting applications for any cutting jobs.
- Spindle lock for disc replacement.

ZRAG-366B / ZRAG-367B 0.7HP
4" Reversible Air Axial Cutter

- Newly designed lower profile axial cutter providing versatile cutting applications.
- Best for restricted areas.
- Light weight ensures fatigue-free use.
- Spindle lock for disc replacement.

Model	Collet Size inch(mm)	Cutting Wheel	Free Speed rpm	Avg. Air Cons. cfm	Length inch(mm)	Net Weight lbs(kgs)	Min. Hose Size inch(mm)	Air Inlet Size inch-NPT/PT
ZRC-361R	–	3"	18000	3.6	8(205)	2(0.9)	3/8(10)	1/4
ZRAC-365B	–	4"	15000	3.6	14.5(370)	2.4(1.1)	3/8(10)	1/4
ZRAG-366B/367B	–	4"	13000/15000	3.6	9.4(240)	2.4(1.1)	3/8(10)	1/4
ZRDG-363	1/4(6)	–	18000	3.6	7.6(195)	1.6(0.7)	3/8(10)	1/4
ZRD368	3/8(10)	–	1600	3.6	8.2(210)	2.4(1.1)	3/8(10)	1/4

Products and specifications subject to change without prior notice

Laser welding removal Tool

Benefits

- Compact angle head housing design for quick and easy use.
- Ergonomic Grip
- 0.5hp Powerful & Durable
- Ideal tool & specifically designed to deal with the latest technique in vehicle assembly laser welding

Features

- High speed cutting wheel made of a specially hardened metal. Depth of cut limitation-optional at either 0.8-1.0mm. The depth limiter ensures that the lower panel doesn't get damaged.
- Protection guard (transparent acetate material) design for safety protection.
- High quality manufacturing and materials guarantee durability.
- High quality alloy steel for internal gears with precision gear teeth design for prolong the gear life.

ST210145
Cutting Wheel
25 x 4mm Diameter

ZST210144
(Shaft for 6mm collet)
ZST210144.1
(Shaft for 1/4" collet)

Shaft for Cutting Depth 0.8mm for 25mm Cutting Wheel

ZST210144.2
(Shaft for 6mm collet)
ZST210144.3
(Shaft for 1/4" collet)

Shaft for Cutting Depth 1.0mm for 25mm Cutting Wheel

Grinding Burr

360° Rotational Cover

ZWR-3212 0.5HP

Laser welding removal Tool

- Solid Tungsten Carbide Cutting wheel with TiAlN coating.
- Superior for high speed and dry cutting

ZWR-3212K Laser welding removal Tool Kit

Kit include:

- 1 pc Laser welding removal Tool
- 2 pcs Spanners
- 1 pc Cutting Wheel
- 1 pc Hex
- 1 pc Depth 0.8mm Shaft
- 1 pc Depth 1.0mm Shaft
- 1 pc Blow Molded Case

Model	Collet Size inch(mm)	Free Speed rpm	Avg. Air Cons. cfm	Length inch(mm)	Net Weight lbs(kgs)	Min. Hose Size inch(mm)	Air Inlet Size inch-NPT/PT
ZWR-3212	1/4(6)	11000	3.5	7(180)	1.5(0.7)	3/8(10)	1/4

ZTU-391 0.5HP

Non-Vacuum | Low Noise

ZTU-391C 0.5HP

Central-Vacuum

ZTU-391S 0.5HP

Self-Generated Vacuum

HB-46-2
HOSE & BAG

- Innovative 180° rotational handle for precise leverage and control.
- Unique double side safety guards and integrated dust extraction.
- system for safe and clean operation.
- Planetary gear system for increased torque.
- Ergonomic cushion grip insulates against cold and vibration.
- Swivel exhaust outlet in rear of tool allows easy operations.
- Paddle style trigger for precise speed control.
- Increase the baffle and prevent hands from being injured.
- Integrated Safety and Dust Extraction System.

Removable Double Sided Safety Guard.
(Patent pending)

Integrate Safety and Dust
Extraction System.
(Patent pending)

180° Rotational Handle (Patent pending)

Model	Spindle Thread mm	Free Speed rpm	Avg. Air Cons. cfm	Length inch(mm)	Net Weight lbs(kgs)	Min. Hose Size inch(mm)	Air Inlet Size inch-NPT/PT
ZTU391	9	4000	3.5	10(254)	2.7(1.2)	3/8(10)	1/4
ZTU391C	9	4000	3.5	10(254)	2.7(1.2)	3/8(10)	1/4
ZTU391S	9	4000	3.5	10(254)	2.7(1.2)	3/8(10)	1/4

Products and specifications subject to change without prior notice

Rust & Paint Removal Tools

ZTU-391K Non-Vacuum

Kit include:

- 1 pc Paint Removal Tool
- 1 pc Rubber Eraser Wheel
- 1 pc Stripping Wheel
- 1 pc Hub
- 3 pcs Wire Wheel
- 1 pc Nipple
- 1 pc Hex
- 1 pc Screw
- 1 pc Blow Molded Cast

ZTU-391CK Central-Vacuum

Kit include:

- 1 pc Paint Removal Tool
- 1 pc Rubber Eraser Wheel
- 1 pc Stripping Wheel
- 1 pc Hub
- 3 pcs Wire Wheel
- 1 pc Nipple
- 1 pc Hex
- 1 pc Screw
- 1 pc Blow Molded Cast

ZST-BTRE115-30
Rubber eraser wheel
Wheel diameter 4"(103mm)
Wheel width 1.2"(30mm)

ZST-BTRE115-30A
Water based eraser
Wheel diameter 4"(103mm)
Wheel width 1.2"(30mm)

ZBT246655
Rubber eraser wheel
Wheel diameter 4"(103mm)
Wheel width 1.2"(30mm)

ZBT246655
Stripping wheel
Wheel diameter 4"(103mm)
Wheel width 1.2"(30mm)

ZBTWW103-23-7
Wire wheel(Coarse)
Wire diameter 0.028"(0.7mm)
Wheel diameter 4"(103mm)
Wheel width 0.91"(23mm)

ZBTWW103-23-5.5
Wire wheel(Medium)
Wire diameter 0.019"(0.5mm)
Wheel diameter 4"(103mm)
Wheel width 0.91"(23mm)

ZBTWW103-23-5
Wire wheel(Fine)
Wire diameter 0.019"(0.5mm)
Wheel diameter 4"(103mm)
Wheel width 0.91"(23mm)

ZST-BT246655A-K03
Hub
Hub width 0.91"(23mm)

ZBTWW103-23-7ASS
Stainless steel wire(Coarse)
Wire diameter 0.028"(0.7mm)
Wheel diameter 4"(103mm)
Wheel width 0.91"(23mm)

ZBTWW103-23-5ASS
Stainless steel wire(Medium)
Wire diameter 0.019"(0.5mm)
Wheel diameter 4"(103mm)
Wheel width 0.91"(23mm)

ZBTWW103-23-5SS
Stainless steel wire(Fine)
Wire diameter 0.019"(0.5mm)
Wheel diameter 4"(103mm)
Wheel width 0.91"(23mm)

ZBTWW103-11-7AM
Wire wheel(Coarse)
Wire diameter 0.028"(0.7mm)
Wheel diameter 4"(103mm)
Wheel width 0.43"(11mm)

ZBTWW103-11-5AM
Wire wheel(Medium)
Wire diameter 0.019"(0.5mm)
Wheel diameter 4"(103mm)
Wheel width 0.43"(11mm)

ZBTWW103-11-5M
Wire wheel(Fine)
Wire diameter 0.019"(0.5mm)
Wheel diameter 4"(103mm)
Wheel width 0.43"(11mm)

ZST-BT28068-K03
Hub
Hub width 0.43"(11mm)

ZBTWW103-11-5ASS
Stainless steel wire(Coarse)
Wire diameter 0.028"(0.7mm)
Wheel diameter 4"(103mm)
Wheel width 0.43"(11mm)

ZBTWW103-11-5ASS
Stainless steel wire(Medium)
Wire diameter 0.019"(0.5mm)
Wheel diameter 4"(103mm)
Wheel width 0.43"(11mm)

ZBTWW103-11-5SS
Stainless steel wire(Fine)
Wire diameter 0.019"(0.5mm)
Wheel diameter 4"(103mm)
Wheel width 0.43"(11mm)

Spot Repair Sander

Benefits

- Mini compact design with angle head Housing at height 75 mm
- Ergonomic Grip
- Easy to use & convenient
- 0.3hp Powerful & Durable
- Ideal for use in paint shop applications for sanding nibs or for sanding small areas and for car headlights polish.
- Dual action for provide uniform sanding surface with a superior finish , ready for buffing application as next steps.

Features

- Angle head dual action sander with 2" Velcro Pad, 1.2" Velcro Pad , Triangle mini Velcro Pad
- High quality bearing provide long tool life
- High quality alloy steel for spiral bevels gears with precision teeth design for tool longevity
- One piece balancer design for reducing vibration of dual action

ZSR-242 0.3HP
Spot Repair Sander

ZSR-242K Spot Repair Sander Kit

Kit include:

- 1 pc Spot Repair Sander
- 1 pc 2" Velcro Pad
- 1 pc 1.2" Velcro Pad
- 1 pc Triangle mini Velcro Pad
- 1 pc Nipple
- 1 pc 2" Wool Pad
- 1 pc 1.2" Wool Pad
- 1 pc 2" Polishing Pad
- 1 pc 1.2" Polishing Pad
- 10 pcs 2" 120# Sandpapers
- 10 pcs 2" 180# Sandpapers
- 10 pcs 2" 320# Sandpapers
- 10 pcs 2" 600# Sandpapers
- 10 pcs 2" 1000# Sandpapers
- 10 pcs 2" 1500# Sandpapers
- 10 pcs Triangle mini 120# Sandpapers
- 10 pcs Triangle mini 180# Sandpapers
- 10 pcs Triangle mini 320# Sandpapers
- 10 pcs Triangle mini 600# Sandpapers
- 10 pcs Triangle mini 1000# Sandpapers
- 10 pcs Triangle mini 1500# Sandpapers
- 10 pcs 1.2" 120# Sandpapers
- 10 pcs 1.2" 180# Sandpapers
- 10 pcs 1.2" 320# Sandpapers
- 10 pcs 1.2" 600# Sandpapers
- 10 pcs 1.2" 1000# Sandpapers
- 10 pcs 1.2" 1500# Sandpapers
- 1 pc Blow Molded Case

Model	Orbit Diameter mm	Free Speed rpm	Avg. Air Cons. cfm	Length inch(mm)	Net Weight lbs(kgs)	Min. Hose Size inch(mm)	Air Inlet Size inch-NPT/PT
ZSR-242	2	13000	2.6	6.1(155)	1.1(0.5)	3/8(10)	1/4

Products and specifications subject to change without prior notice

Spot Repair Sander Accessories

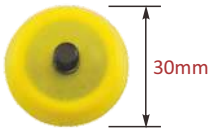

ZST13145
1.2" Velcro Pad

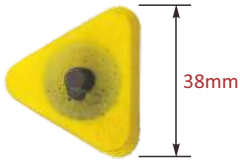

ZST13144
Triangle mini Velcro Pad

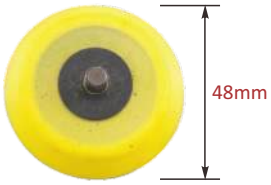

ZST13146
2" Velcro Pad

ZBT131-30-1
1.2" Wool Pad

ZBT131-2-1
2" Wool Pad

ZBT131-30-2
1.2" Polishing Pad

ZBT131-2-2
2" Polishing Pad

ZP-131-32-120
120# Sandpaper (32mm)

ZP-131-32-180
180# Sandpaper (32mm)

ZP-131-32-320
320# Sandpaper (32mm)

ZP-131-32-600
600# Sandpaper (32mm)

ZP-131-32-1000
1000# Sandpaper (32mm)

ZP-131-32-1500
1500# Sandpaper (32mm)

ZP-131-40-3-120
120# Sandpaper (40mm)

ZP-131-40-3-180
180# Sandpaper (40mm)

ZP-131-40-3-320
320# Sandpaper (40mm)

ZP-131-40-3-600
600# Sandpaper (40mm)

ZP-131-40-3-1000
1000# Sandpaper (40mm)

ZP-131-40-3-1500
1500# Sandpaper (40mm)

ZP-ZOS-2-120
120# Sandpaper (50.8mm)

ZP-ZOS-2-180
180# Sandpaper (50.8mm)

ZP-ZOS-2-320
320# Sandpaper (50.8mm)

ZP-ZOS-2-600
600# Sandpaper (50.8mm)

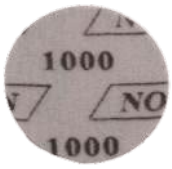

ZP-ZOS-2-1000
1000# Sandpaper (50.8mm)

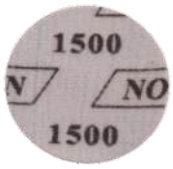

ZP-ZOS-2-1500
1500# Sandpaper (50.8mm)

Air Sander / Polisher

ZOS-343 0.5HP
3" Orbital Sander

- Ideal for headlamp, windshield and small area repair and finishing.
- 2.5mm orbital diameter.

6N-663636-11
5" White Compounding Pad -Velcro #80 Grip

6N-663637-11
5" Yellow Compounding Pad -Velcro #70 Grip

6N-663638-11
5" Wool Polishing Pad - Velcro

ZVP-7N-7747 0.6HP
5" Vertical Sander / Polisher

- Composite Motor Housing
- with Air Regulator

- Composite Motor Housing
- Handle Exhaust
- Low Noise 80 dB(A)

ZP388 0.25HP 3" Mini Polisher - 1/4"-20 or M6x1.0
ZP389 0.25HP 3" Mini Polisher - 5/16"-24

ZP388K 3" Mini Polisher - 1/4"-20 or M6x1.0
ZP389K 3" Mini Polisher - 5/16"-24

Kit include:

- 1 pc 3" Mini Polisher
- 1 pc Key Wrench
- 1 pc 3" Velcro Sanding Pad (Installed)
- 1 pc 3-1/2" Bonnet
- 1 pc 3-1/2" Yellow Compounding Pad
- 1 pc 3-1/2" White Compounding Pad

ZNRS-71-6346 0.3HP
Nib Removal Sander - Orbit Dia. 3 mm

- Small Diameter Head Size for Better Visibility, Less Buffing
- Lightweight, Easy-Grip, Right Angle Tool
- Better Visibility, Less Buffing
- Precise Speed Control
- Rear Exhaust with Available Overhose

ZASL-342A 0.5HP
Low Noise 2" Angle Sander

- Includes locking-type pad(2" diameter or 3" diameter).
- The Angle Sander is ideal for all types of sanding on small areas.

Model	Pad Size inch(mm)	Orbit Diameter inch(mm)	Spindle Thread	Free Speed rpm	Avg. Air Cons. cfm(l/min)	Length inch(mm)	Noise Level db(A)	Net Weight lbs(kgs)
ZOS-343	3(76)	–	–	15000	3.5(99.1)	7.3(185)	86	1.5(0.7)
ZVP-7N-7747	5(125)	–	5/16"-24	3500	3.9(110)	144x205x214mm	80	2.2(1)
ZNRS-71-6346	1-1/4(32)	1/8(3)	–	12000	1(28.3)	7-7/8(197)	80	1.1(0.5)
ZP388	3(75)	–	1/4"-20 or M6X1.0	3200	3.2(91)	4.6(116)	80	1.59(0.72)
ZP389	3(75)	–	5/16"-24	3200	3.2(91)	4.6(116)	80	1.59(0.72)
ZASL-342A	–	–	Sanding Wheel: 2", 3"	15000	3.1(87.8)	7(180)	–	1.5(0.7)

- Operating Air Pressure: 90psi/6.2bar
- Min. Hose Size: 3/8(10)inch(mm)
- Air Inlet Size: 1/4" NPT/PT

Products and specifications subject to change without prior notice

Air Mini Sander / Air Mini Polisher

ZP385M / ZP385A 0.3HP
Air Mini Orbital Sander

ZP385MK / ZP385AK Air Mini Orbital Sander Kit

Kit include:
- 2" / 3" Mini Orbital Sander (ZP385M or ZP385A) 1 pc
- 320 Grit Sanding Disc 10 pcs
- 400 Grit Sanding Disc 10 pcs
- 600 Grit Sanding Disc 10 pcs
- 2" Hook & Loop Type Pad 1 pc
- 3" Hook & Loop Type Pad 1 pc

ZP386A 0.3HP
Air Mini Sander

ZP386AK Air Mini Sander Kit

Kit include:
- 3" Mini Sander (ZP386A) 1 pc
- 80 Grit Sanding Disc 10 pcs
- 100 Grit Sanding Disc 10 pcs
- 120 Grit Sanding Disc 10 pcs
- Coarse Preparation Disc 1 pc
- Medium Preparation Disc 1 pc
- Fine Surface Preparation Disc 1 pc

ZP387M / ZP387A 0.3HP
Air Mini Polisher

ZP387MK / ZP387AK Air Mini Polisher Kit

Kit include:
- 3" Mini Polisher (ZP387M or ZP387A) 1 pc
- 3" Hard Compounding Pad 1 pc
- 3" Soft Compounding Pad 1 pc
- 3-1/2" Lambs wool Bonnet 1 pc
- 3" Hook & Loop Backing Pad 1 pc

Model	Pad Size inch(mm)	Spindle Thread inch(mm)	Free Speed rpm	Avg. Air Cons. cfm(l/min)	Overall Length inch(mm)	Net Weight lbs(kgs)
ZP385M	2(51) or 3(76)	(M6)	16000	4(113)	4-11/16(120)	2(0.98)
ZP385A	2(51) or 3(76)	5/16-24 UNC	16000	4(113)	4-11/16(120)	2(0.98)
ZP386A	3(76)	1/4-20 UNC	18000	4(113)	4-11/16(120)	1.5(0.68)
ZP387M	3(76)	(M6)	2000	4(113)	5-1/4(138)	1.6(0.75)
ZP387A	3(76)	5/16-24 UNC	2000	4(113)	5-1/4(138)	1.6(0.75)

- Min. Hose Size: 3/8(10)inch(mm)
- Air Inlet Size: 1/4" NPT/PT

Air Belt Sander

- Low Vibration & Ergonomic handle design
- Easy changing sand belt
- 360° degree sanding direction

ZBS-382 0.5HP
Air Belt Sander

ZBS-383 0.5HP
Air Belt Sander

ZBS-385 0.5HP
Air Belt Sander

Model	Wheel Material	Size of Belt mm	Free Speed rpm	Avg. Air Cons. cfm	Overall Length inch(mm)	Net Weight lbs(kgs)	Air Hose (I.D.)	Air Inlet Size inch-NPT/PT
ZBS-382A	RUBBER WHEEL	10X330	17000	4	12.83(326)	1.94(0.88)	3/8"	1/4
ZBS-382N	STEEL WHEEL	10X330	17000	4	12.83(326)	1.94(0.88)	3/8"	1/4
ZBS-382N1	STEEL WHEEL	6X457	17000	4	15.35(390)	2.86(1.3)	3/8"	1/4
ZBS-382N3	STEEL WHEEL	13X457	17000	4	15.35(390)	2.07(0.94)	3/8"	1/4
ZBS-382N4	STEEL WHEEL	13X610	17000	4	17.72(450)	2.18(0.99)	3/8"	1/4
ZBS-382N5	STEEL WHEEL	13X330	17000	4	12.83(326)	1.98(0.9)	3/8"	1/4
ZBS-382N6	STEEL WHEEL	15X475	17000	4	15.35(390)	1.98(0.9)	3/8"	1/4
ZBS-382N7	STEEL WHEEL	8X475	17000	4	15.35(390)	2.86(1.3)	3/8"	1/4
ZBS-383	RUBBER WHEEL	20X520	17000	4	16.02(407)	2.93(1.33)	3/8"	1/4
ZBS-383A	RUBBER WHEEL	20X520	17000	4	16.02(407)	2.93(1.33)	3/8"	1/4
ZBS-383N	STEEL WHEEL	20X520	17000	4	16.02(407)	2.93(1.33)	3/8"	1/4
ZBS-383A1	RUBBER WHEEL	20X520	17000	4	16.02(407)	2.93(1.33)	3/8"	1/4
ZBS-383A2	RUBBER WHEEL	20X520	17000	4	16.02(407)	2.93(1.33)	3/8"	1/4
ZBS-383N1	STEEL WHEEL	20X330	17000	4	12.8(325)	1.98(0.9)	3/8"	1/4
ZBS-383N2	STEEL WHEEL	20X520	17000	4	16.02(407)	2.18(0.99)	3/8"	1/4
ZBS-385A	RUBBER WHEEL	30X540	13000	5	16.34(415)	3.3(1.5)	3/8"	1/4
ZBS-385A1	RUBBER WHEEL	20X520	13000	5	16.34(415)	3.3(1.5)	3/8"	1/4
ZBS-385N	STEEL WHEEL	30X540	13000	5	16.34(415)	3.3(1.5)	3/8"	1/4
ZBS-385Z2A	RUBBER WHEEL	20X520	13000	5	16.34(415)	3.3(1.5)	3/8"	1/4
ZBS-385Z2N	STEEL WHEEL	20X520	13000	5	16.34(415)	3.3(1.5)	3/8"	1/4
ZBS-385Z3A	RUBBER WHEEL	30X540	13000	5	16.34(415)	3.3(1.5)	3/8"	1/4
ZBS-385Z3N	STEEL WHEEL	30X540	13000	5	16.34(415)	3.3(1.5)	3/8"	1/4

Products and specifications subject to change without prior notice

Air Belt Sander

ZBS-3892 / ZBS-3893
Air Belt Sander

ZBS-3894
Air Belt Sander

ZBS-371
Air Belt Sander

371-AA
Contact Arm Assy
for belt wide 8&10

371-AD
Contact Arm Assy
for belt wide 10&12

371-BB
Contact Arm Assy
for belt wide 3

371-BF
Contact Arm Assy
for belt wide 8&10

371-BG
Contact Arm Assy
for belt wide 3&5

371-BH
Contact Arm Assy
for belt wide 5&6

371-CC
Contact Arm Assy
for belt wide 10&12

371-DE
Contact Arm Assy
for belt wide 8&10

ZBS-371K Air Belt Sander Kit

Kit include:

- ZBS-371 1 pc
- 371-AA 1 pc
- 371-AD 1 pc
- 371-BB 1 pc
- 371-BF 1 pc
- 371-BG 1 pc
- 371-BH 1 pc
- 371-CC 1 pc
- 371-DE 1 pc
- 3 pcs Belt of Each Arm (#80, #100, #120) 24 pcs
- Blow Case 1 pc

Model	Wheel Material	Size of Belt mm	Free Speed rpm	Avg. Air Cons. cfm	Overall Length inch(mm)	Net Weight lbs(kgs)	Air Hose (I.D.)	Air Inlet Size inch-NPT/PT
ZBS-3892	STEEL WHEEL	20X640	13000	4	16.34(415)	3.3(1.5)	3/8"	1/4
ZBS-3893A	RUBBER WHEEL	30X640	13000	4	16.34(415)	3.3(1.5)	3/8"	1/4
ZBS-3893G	RUBBER WHEEL	30X760	3300	4	16.34(415)	3.3(1.5)	3/8"	1/4
ZBS-3894	RUBBER WHEEL	40X750	13000	4	16.34(415)	3.3(1.5)	3/8"	1/4
ZBS-3894G	RUBBER WHEEL	40X760	3300	4	16.34(415)	3.3(1.5)	3/8"	1/4
ZBS-371	STEEL WHEEL	10X330	16000	5	11.6(295)	2.09(0.95)	3/8"	1/4

Angle Sander / Polisher

ZAP-342L 0.5HP

Right Angle Buffer, 3" Diameter

(3" Rotary Right Angle Polisher)

ZAP3308 / ZAP330825 0.5HP

Angle Sander / Polisher

Z26041	ZBT22749	ZBT22750	ZBT22751	Z23138
3/8"x16NC	M16-x2	M14-x2	5/8"x11NC	1/4"x20

ADAPTERS

ZAP308 / ZAP30825 1.0HP

Angle Sander / Polisher

ZBT1650-05G
5.5" FINE GRAY POLISHING PAD

ZBT1650-03G
3" FINE GRAY POLISHING PAD

ZBT1650-05Y
5.5" COARSE YELLOW POLISHING PAD

ZBT1650-03Y
3" COARSE YELLOW POLISHING PAD

ZBT1650-05W
5.5" WOOL WHEEL

ZBT1650-03W
3" WOOL WHEEL

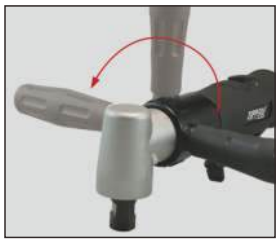

180° Rotational Handle

Z210K-8
3" POLOC PAD

ZBT22748
STRIPPING WHEEL

Z26036-7
RUBBER ERASER

ZBTOB-385V0Y-T10
5" PAD (Hook-up)

ZBTOB-38-3V0Y-W80
3" 80g PAD (Hook-up)

Model	Spindle Thread	Free Speed rpm	Avg. Air Cons. cfm	Overall Length inch(mm)	Net Weight lbs(kgs)	Min. Hose Size inch(mm)	Air Inlet Size inch-NPT/PT
ZAP-342L	5/16"-24	2600	3.5	12.1(307)	2.6(1.2)	3/8(10)	1/4
ZAP3308	5/16"-24	4000	3.5	8.8(225)	2.2(1)	3/8(10)	1/4
ZAP330825	5/16"-24	2400	3.5	8.8(225)	2.2(1)	3/8(10)	1/4
ZAP308	5/16"-24	4000	4.1	8.8(225)	2.2(1)	3/8(10)	1/4
ZAP30825	5/16"-24	2400	4.1	8.8(225)	2.2(1)	3/8(10)	1/4

Products and specifications subject to change without prior notice

Angle Sander / Angle Polisher

- Excellent for roughing body filler, rust removal, and smoothing welds.
- Both hands operating.
- Lightweight for easy handling.
- Outperforms than regular ones.

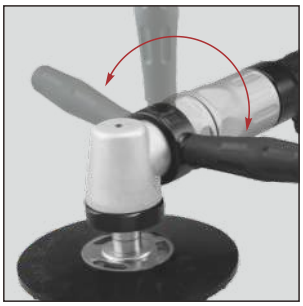

180° Rotational Handle

Spindle Lock

Low noise design

ZAS-982 / ZAS-983 1.3HP

7" Angle Polisher

ZBT871-07W
7" Wool pad

ZST77152
(5/8"-11 Thread)
ZST77152-1
(M14x2 Thread)
7" Pad Hook-up

ZST87158
(5/8"-11 Thread)
ZST87158.1
(M14x2 Thread)
7" Plastic Pad

ZST870S60
(5/8"-11 Thread)
ZST870S60.1
(M14x2 Thread)
7" Rubber Backing Pad

Model	Spindle Thread	Free Speed rpm	Avg. Air Cons. cfm	Overall Length inch(mm)	Net Weight lbs(kgs)	Min. Hose Size inch(mm)	Air Inlet Size inch-NPT/PT
ZAS-982	5/8"-11, M14x2	4500	3.8	12.9(328)	5.1(2.3)	3/8(10)	1/4
ZAS-983	5/8"-11, M14x2	2500	3.8	12.9(328)	5.1(2.3)	3/8(10)	1/4

ZAP-882 1.3HP

7" Angle Polisher

Benefits

- Powerful motor for productivity
- Maximize operator comfort
- Lightweight with side handle for easy handing
- Excellent for buffing and polishing flat and contoured surfaces

Features

- Heavy-duty angle polisher
- 1.0 hp precision motor
- Built-in air regulator
- High quality alloy steel bevel gears with well hardened and ground
- Delivered with optional 7" Pad

ZAS-883 1.3HP

7" Angle Sander

Benefits

- Powerful motor for productivity
- Low vibrations and durability
- Lightweight with side handle for easy handing
- Perfect for weld smoothing, paint, rust and stone removal

Features

- Heavy-duty angle sander
- 1.0 hp precision motor
- Built-in air regulator
- High quality alloy steel bevel gears with well hardened and ground
- Delivered with optional 7" Pad
- Muffled rear exhaust

ZBT871-07W
7" Wool pad

ZST77152
(5/8"-11 Thread)
ZST77152-1
(M14x2 Thread)
7" Pad Hook-up

ZST87158
(5/8"-11 Thread)
ZST87158.1
(M14x2 Thread)
7" Plastic Pad

ZST870S60
(5/8"-11 Thread)
ZST870S60.1
(M14x2 Thread)
7" Rubber Backing Pad

Model	Spindle Thread	Free Speed rpm	Avg. Air Cons. cfm	Overall Length inch(mm)	Net Weight lbs(kgs)	Min. Hose Size inch(mm)	Air Inlet Size inch-NPT/PT
ZAP-882	5/8"-11, M14x2	2500	3.8	13.6(345)	3.9(1.7)	3/8(10)	1/4
ZAS-883	5/8"-11, M14x2	4000	3.8	13.6(345)	3.9(1.7)	3/8(10)	1/4

Products and specifications subject to change without prior notice

Air Orbital Sander

ZP351 0.25HP

Non-Vacuum

3" Mini Orbital Palm Sander

ZP354-5 Non-Vacuum
ZP354-5C Central-Vacuum
ZP354-5S Self-Generated Vacuum

5" Air Random Orbital Sander

ZP354-6 Non-Vacuum
ZP354-6C Central-Vacuum
ZP354-6S Self-Generated Vacuum

6" Air Random Orbital Sander

ZOS-5N / ZOS-6N 0.3HP

5"/6" Non-Vac.
Random Orbital Sander

ZOS-5C / ZOS-6C 0.3HP

5"/6" Central-Vacuum
Random Orbital Sander

ZOS-5S / ZOS-6S 0.3HP

5"/6" Self-Generated
Vacuum Random Orbital Sander

ZOS-5NF / ZOS-6NF 0.3HP

5"/6" Oil-Free Non-Vac.
Random Orbital Sander

ZOS-5CF / ZOS-6CF 0.3HP

5"/6" Oil-Free Central-Vacuum
Random Orbital Sander

ZOS-5SF / ZOS-6SF 0.3HP

5"/6" Oil-Free Self-Generated
Vacuum Random Orbital Sander

Model	Pad Size inch(mm)	Free Speed rpm	Avg. Air Cons. cfm(l/min)	Noise Level db(A)	Net Weight lbs(kgs)	Min. Hose Size inch(mm)	Air Inlet Size inch-NPT/PT
ZP351	3(76)	12000	2.5(70.8)	81	1.54(0.7)	3/8(10)	1/4
ZP354-5/6	5(127)/6(152)	12000	2.5(70.8)	82	1.8(0.8)	3/8(10)	1/4
ZP354-5C/6C	5(127)/6(152)	12000	2.5(70.8)	82	1.8(0.8)	3/8(10)	1/4
ZP354-5S/6S	5(127)/6(152)	12000	2.5(70.8)	82	1.7(0.78)	3/8(10)	1/4
ZOS-5N ZOS-5C ZOS-5S	5(127)	12000	6(170)	83	1.86(0.84) 2.01(0.91) 2.01(0.91)	3/8(10)	1/4
ZOS-6N ZOS-6C ZOS-6S	6(152)	12000	6(170)	83	1.97(0.89) 2.12(0.96) 2.12(0.96)	3/8(10)	1/4
ZOS-5NF ZOS-5CF ZOS-5SF	5(127)	12000	6(170)	83	1.61(0.73) 1.77(0.8) 1.77(0.8)	3/8(10)	1/4
ZOS-6NF ZOS-6CF ZOS-6SF	6(152)	12000	6(170)	83	1.72(0.78) 1.88(0.85) 1.88(0.85)	3/8(10)	1/4

- Operating Air Pressure: 90psi/6.2bar

Random Orbital Polisher

- Excellent for swirl-free polishing
- Probably the best polisher in the world!

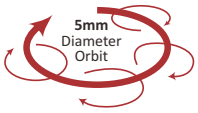

ZBT1650-03W
3" WOOL WHEEL

ZBT1650-03Y
3" SPONGE WHEEL

ZBT1650-03G
3" FINE GRAY POLISHING PAD

ZOP-35 0.3HP
3" Random Orbital Polisher

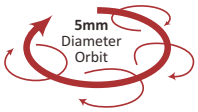

ZBT1650-05W
5.5" WOOL WHEEL

ZBT1650-05Y
5.5" SPONGE WHEEL

ZBT1650-05G
5.5" FINE GRAY POLISHING PAD

ZOP-55 0.3HP
5" Random Orbital Polisher

ZBT1650-05W
5.5" WOOL WHEEL

ZBT1650-05Y
5.5" SPONGE WHEEL

ZBT1650-05G
5.5" FINE GRAY POLISHING PAD

ZHOP-510 0.5HP
5" Random Orbital Polisher

Model	Pad Size inch(mm)	Dia. Orbit mm	Free Speed rpm	Avg. Air Cons. cfm	Noise Level db(A)	Vibration m/s^2	Net Weight lbs(kgs)	Min. Hose Size inch(mm)	Air Inlet Size inch-NPT/PT
ZOP-35	3(75)	5	11000	1.6	80	0.8	1.3(0.5)	3/8(10)	1/4
ZOP-55	5(125)	5	11000	1.6	80	0.8	1.5(0.7)	3/8(10)	1/4
ZHOP-510	5(125)	10	11000	3	80	0.8	2.6(1.2)	3/8(10)	1/4

Products and specifications subject to change without prior notice

Random Orbital Sanders

- Low vibration for swirl-free finishes.
- Durable, lightweight composite housing design.
- Include low profile balanced sanding pad.

2.5mm (3" 80g PAD)Random Orbital Sanders

ZOS3-214-N3

0.3HP | Non-Vacuum

ZOS3-214-C3

0.3HP | Central-Vacuum

ZOS3-214-S3

0.3HP | Self-Generated Vacuum

2.5mm Random Orbital Sanders

ZOS3-214-N5 / ZOS3-214-N6

0.3HP | Non-Vacuum

ZOS3-214-C5 / ZOS3-214-C6

0.3HP | Central-Vacuum

ZOS3-214-S5 / ZOS3-214-S6

0.3HP | Self-Generated Vacuum

5mm Random Orbital Sanders

ZOS-214-N5 / ZOS-214-N6

0.3HP | Non-Vacuum

ZOS-214-C5 / ZOS-214-C6

0.3HP | Central-Vacuum

ZOS-214-S5 / ZOS-214-S6

0.3HP | Self-Generated Vacuum

Model	Pad Size inch(mm)	Dia. Orbit inch(mm)	Free Speed rpm	Avg. Air Cons. cfm	Noise Level db(A)	Vibration m/s²	Net Weight lbs(kgs)	Min. Hose Size inch(mm)	Air Inlet Size inch-NPT/PT
ZOS-214-N5/C5/S5	5(125)	3/16(5)	11000	1.6	80	0.8	2(0.9)	3/8(10)	1/4
ZOS-214-N6/C6/S6	6(150)	3/16(5)	11000	1.6	80	0.8	2(0.9)	3/8(10)	1/4
ZOS3-214-N5/C5/S5	5(125)	3/32(2.5)	11000	1.6	80	0.8	2(0.9)	3/8(10)	1/4
ZOS3-214-N6/C6/S6	6(150)	3/32(2.5)	11000	1.6	80	0.8	2(0.9)	3/8(10)	1/4
ZOS3-214-N3/C3/S3	3(75)	3/32(2.5)	11000	1.6	80	0.8	1.8(0.8)	3/8(10)	1/4

Air Orbital Sander

- Low vibration for swirl-free finishes.
- Durable, lightweight composite housing design.
- Include low profile balanced sanding pad.

2.5mm Random Orbital Sanders

ZOS01-3-N5 / ZOS01-3-N6

0.3HP | Non-Vacuum

ZOS01-3-C5 / ZOS01-3-C6

0.3HP | Central-Vacuum

HB-46-2
HOSE & BAG

ZOS01-3-S5 / ZOS01-3-S6

0.3HP | Self-Generated Vacuum

5mm Random Orbital Sanders

ZOS01-N5 / ZOS01-N6

0.3HP | Non-Vacuum

ZOS01-C5 / ZOS01-C6

0.3HP | Central-Vacuum

HB-46-2
HOSE & BAG

ZOS01-S5 / ZOS01-S6

0.3HP | Self-Generated Vacuum

10mm Random Orbital Sanders

ZOS01-9-N5 / ZOS01-9-N6

0.3HP | Non-Vacuum

ZOS01-9-C5 / ZOS01-9-C6

0.3HP | Central-Vacuum

HB-46-2
HOSE & BAG

ZOS01-9-S5 / ZOS01-9-S6

0.3HP | Self-Generated Vacuum

Model	Pad Size inch(mm)	Dia. Orbit inch(mm)	Free Speed rpm	Avg. Air Cons. cfm	Noise Level db(A)	Vibration m/s²	Net Weight lbs(kgs)	Min. Hose Size inch(mm)	Air Inlet Size inch-NPT/PT
ZOS01-N5/C5/S5	5(125)	3/16(5)	11000	1.6	80	0.8	2(0.9)	3/8(10)	1/4
ZOS01-N6/C6/S6	6(150)	3/16(5)	11000	1.6	80	0.8	2(0.9)	3/8(10)	1/4
ZOS01-3-N5/C5/S5	5(125)	3/32(2.5)	11000	1.6	80	0.8	2(0.9)	3/8(10)	1/4
ZOS01-3-N6/C6/S6	6(150)	3/32(2.5)	11000	1.6	80	0.8	2(0.9)	3/8(10)	1/4
ZOS01-9-N5/C5/S5	5(125)	3/8(10)	11000	1.6	80	0.8	2(0.9)	3/8(10)	1/4
ZOS01-9-N6/C6/S6	6(150)	3/8(10)	11000	1.6	80	0.8	2(0.9)	3/8(10)	1/4

Products and specifications subject to change without prior notice

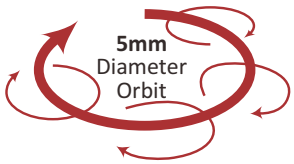

ZTHS-C5 / ZTHS-C6 0.5HP

Central Vacuum 2-Hand Random Orbital Sanders

Benefits

- Powerful and lightweight.
- Lube Free Design eliminates contamination of the work environment.
- 3-in-1 hose design same as FESTOOL IAS 2 Connection. supplies air, extracts dust, and provides an exhaust all through one hose.

Features

- Ergonomic housing design.
- Hardened Steel Alloy Cylinder for more durable & longevity.
- Innovative Anti-Dust Protection system.
- Lube Free Design eliminates contamination of the work environment

ZTHG-C5 / ZTHG-C6 0.5HP

Central Vacuum 2-Hand Gear-Driven Sanders

Benefits

- Powerful and lightweight.
- 900 rpm motor produces excellent low speed torque.
- Unique epicycloidal pad motion generates torque-enhanced power, for consistent material removal.
- Lube Free Design eliminates contamination of the work environment.
- 3-in-1 hose design same as FESTOOL IAS 2 Connection. supplies air, extracts dust, and provides an exhaust all through one hose.

Features

- Long handle design for easy two-handed control.
- High quality alloy steel of gear driven gear with precision teeth design for durable tool life.
- Speed control lever is conveniently located for easy thumb adjustment.
- 3-in-1 hose design same as FESTOOL IAS 2 Connection.

Model	Pad Size inch(mm)	Dia. Orbit inch(mm)	Free Speed rpm	Avg. Air Cons. cfm	Net Weight lbs(kgs)	Min. Hose Size inch(mm)	Air Inlet Size inch-NPT/PT
ZTHS-C5	5(125)	3/16(5)	10000	3	2.6(1.2)	3/8(10)	1/4
ZTHS-C6	6(150)	3/16(5)	10000	3	2.6(1.2)	3/8(10)	1/4
ZTHG-C5	5(125)	3/16(5)	900	3	3.3(1.5)	3/8(10)	1/4
ZTHG-C6	6(150)	3/16(5)	900	3	3.5(1.6)	3/8(10)	1/4

- The 2-hand handle and low vibration combined to provide superior control and flawless finishes.
- Durable lightweight composite housing design.

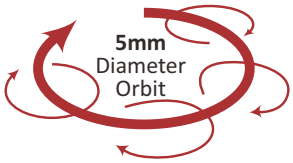

5mm 2-Hand Random Orbital Sanders

ZP347-5

0.5HP | Non-Vacuum

ZP347-6

0.5HP | Non-Vacuum

ZP347-C5

0.5HP | Central-Vacuum

ZP347-C6

0.5HP | Central-Vacuum

HB-46-2
HOSE & BAG

ZP347-S5

0.5HP | Self-Generated Vacuum

HB-46-2
HOSE & BAG

ZP348

0.5HP | Self-Generated Vacuum

Model	Pad Size inch(mm)	Dia. Orbit inch(mm)	Free Speed rpm	Avg. Air Cons. cfm	Noise Level db(A)	Vibration m/s^2	Net Weight lbs(kgs)	Min. Hose Size inch(mm)	Air Inlet Size inch-NPT/PT
ZP347-5/C5/S5	5(125)	3/16(5)	10000	3	80	0.8	2.6(1.2)	3/8(10)	1/4
ZP347-6/C6	6(150)	3/16(5)	10000	3	80	0.8	2.6(1.2)	3/8(10)	1/4
ZP348	6(150)	3/16(5)	10000	3	80	0.8	2.6(1.2)	3/8(10)	1/4

Products and specifications subject to change without prior notice

2-Hand Random Orbital Sanders

- Large orbit for removing heavy material with swirl-free finish.
- Durable lightweight composite housing design.

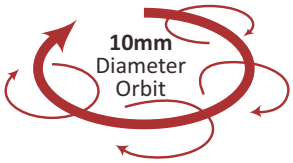

10mm 2-Hand Random Orbital Sanders

ZP349-5

0.5HP | Non-Vacuum

ZP349-6

0.5HP | Non-Vacuum

ZP349-C5

0.5HP | Central-Vacuum

ZP349-C6

0.5HP | Central-Vacuum

HB-46-2
HOSE & BAG

ZP349-S5

0.5HP | Self-Generated Vacuum

HB-46-2
HOSE & BAG

ZP350

0.5HP | Self-Generated Vacuum

Model	Pad Size inch(mm)	Dia. Orbit inch(mm)	Free Speed rpm	Avg. Air Cons. cfm	Noise Level db(A)	Vibration m/s^2	Net Weight lbs(kgs)	Min. Hose Size inch(mm)	Air Inlet Size inch-NPT/PT
ZP349-5/C5/S5	5(125)	3/16(5)	10000	3	80	0.8	2.6(1.2)	3/8(10)	1/4
ZP349-6/C6	6(150)	3/16(5)	10000	3	80	0.8	2.6(1.2)	3/8(10)	1/4
ZP350	6(150)	3/16(5)	10000	3	80	0.8	2.6(1.2)	3/8(10)	1/4

- The strength and power of this sander lets you remove heavy material and body filler on large, flat surfaces leaving a swirl-free finish.
- A long life, vibration-free performance

Epicycloidal pattern of Gear-Driven Orbital Sander!

2-Hand Gear-Driven Sanders

ZP337-5

0.5HP | Non-Vacuum

ZP337-C5

0.5HP | Central-Vacuum

ZP337-S5

0.5HP | Self-Generated Vacuum

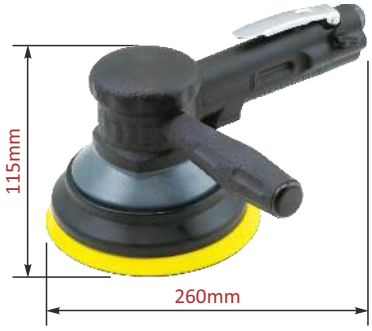

ZP337-6

0.5HP | Non-Vacuum

ZP337-C6

0.5HP | Central-Vacuum

ZP337-S6

0.5HP | Self-Generated Vacuum

ZGS-N8

0.5HP | Non-Vacuum

ZGS-C8

0.5HP | Central-Vacuum

ZGS-S8

0.5HP | Self-Generated Vacuum

Model	Pad Size inch(mm)	Dia. Orbit inch(mm)	Free Speed rpm	Avg. Air Cons. cfm	Noise Level db(A)	Vibration m/s²	Net Weight lbs(kgs)	Min. Hose Size inch(mm)	Air Inlet Size inch-NPT/PT
ZP337-5/C5/S5	5(125)	3/16(5)	900	3	82	<2.5	3.3(1.5)	3/8(10)	1/4
ZP337-6/C6/S6	6(150)	3/16(5)	900	3	82	<2.5	3.5(1.6)	3/8(10)	1/4
ZGS-N8/C8/S8	8(200)	3/16(5)	900	3	82	<2.5	3.5(1.6)	3/8(10)	1/4

Products and specifications subject to change without prior notice

- Smooth, reliable and powerful.
- Long lasting durability with low maintenance.
- For all types of surface preparation and rapid removal of material from large areas.

Heavy Duty Jitterbug Sanders

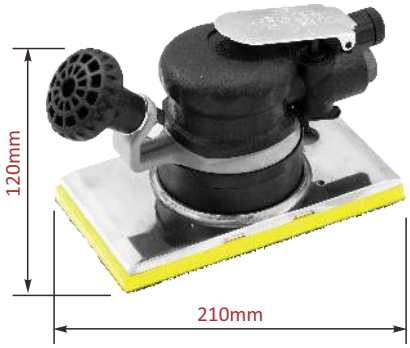

ZJS-NL4C / ZJS-NL4AC

0.3HP | Non-Vacuum | Clip Type

ZHS-NL4C / ZHS-NL4AC

0.5HP | Non-Vacuum | Clip Type

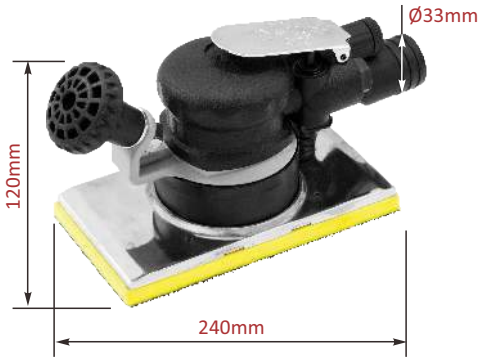

ZJS-CL4C

0.3HP | Central-Vacuum

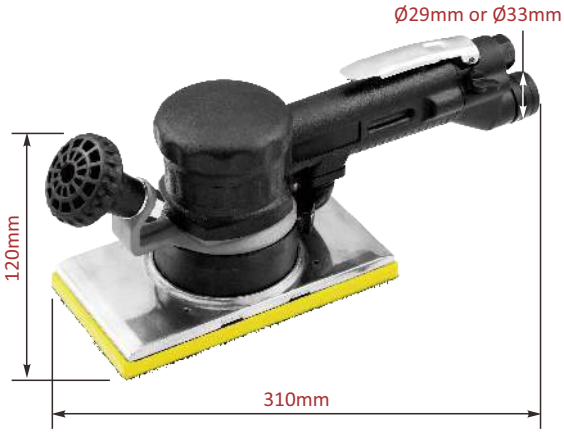

ZHS-CL4C

0.5HP | Central-Vacuum

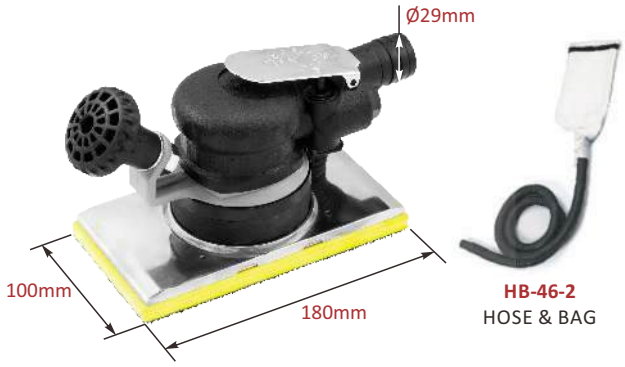

ZJS-SL4C

0.3HP | Self-Generated Vacuum

ZHS-SL4C

0.5HP | Self-Generated Vacuum

Model	Dia. Orbit inch(mm)	Free Speed rpm	Avg. Air Cons. cfm	Noise Level db(A)	Vibration m/s²	Net Weight lbs(kgs)	Min. Hose Size inch(mm)	Air Inlet Size inch-NPT/PT
ZJS-NL4C/NL4AC/CL4C/SL4C	1/8(3.2)	8500	1.6	80	0.8	2.6(1.2)	3/8(10)	1/4
ZHS-NL4C/NL4AC/CL4C/SL4C	3/16(5)	8500	3	80	0.8	3.3(1.5)	3/8(10)	1/4

- Compact design and comfortable grip.
- Heavy-duty construction for durable operations.
- Pad size: 75mm*100mm for ZP339A, 100mm*110mm for ZOS-7511A.

Jitterbug Sanders

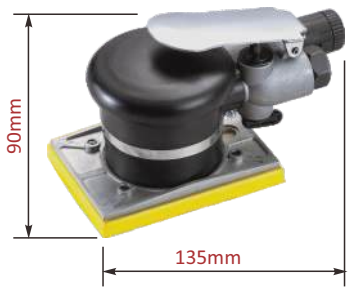

ZP339

0.3HP | Non-Vacuum

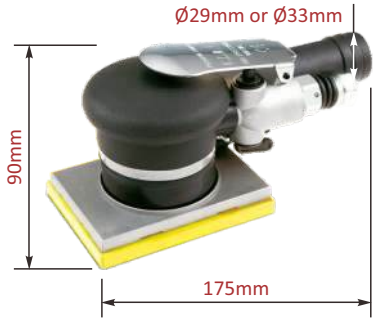

ZP339C

0.3HP | Central-Vacuum

ZP339S

0.3HP | Self-Generated Vacuum

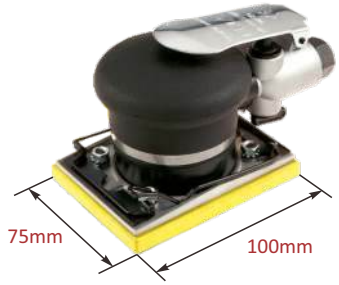

ZP339A

0.3HP | Non-Vacuum

ZOS-7511

0.3HP | Central-Vacuum

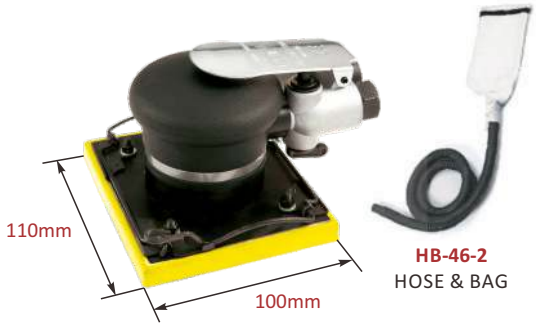

ZOS-7511A

0.3HP | Self-Generated Vacuum

- Compact design and comfortable grip.
- Heavy-duty construction for durable operations.
- Ideal for all types of surface sanding, polishing and scrubbing.

Delta Sanders

ZP338

0.3HP | Non-Vacuum

ZP338C

0.3HP | Central-Vacuum

ZP338S

0.3HP | Self-Generated Vacuum

Model	Dia. Orbit inch(mm)	Free Speed rpm	Avg. Air Cons. cfm	Noise Level db(A)	Vibration m/s^2	Net Weight lbs(kgs)	Min. Hose Size inch(mm)	Air Inlet Size inch-NPT/PT
ZP339/339C/339S/339A	1/8(3.2)	10000	1.6	80	0.8	1.5(0.7)	3/8(10)	1/4
ZOS-7511/7511A	1/8(3.2)	10000	1.6	80	0.8	1.5(0.7)	3/8(10)	1/4
ZP338/338C/338S	1/8(3.2)	10000	1.6	80	0.8	1.5(0.7)	3/8(10)	1/4

Products and specifications subject to change without prior notice

Air Jitterbug Sanders

- Smooth, reliable and powerful.
- Long lasting durability with low maintenance.
- For all types of surface preparation and rapid removal of material from large areas.

2-Hand Gear-Driven Sanders

ZOS-927

0.3HP | Non-Vacuum

ZOS-927A

0.3HP | Non-Vacuum | Clip Type

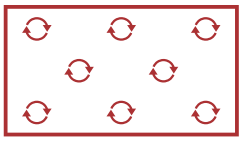

10mm Dia. Orbit Motion

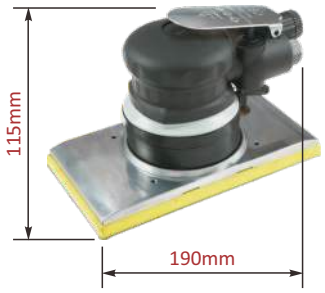

ZP356 / ZP356A

0.3HP | Non-Vacuum | Clip Type

ZP356C

0.3HP | Central-Vacuum

ZP356S

0.3HP | Self-Generated Vacuum

ZHS-NL4 / ZHS-NL4A

0.5HP | Non-Vacuum | Clip Type

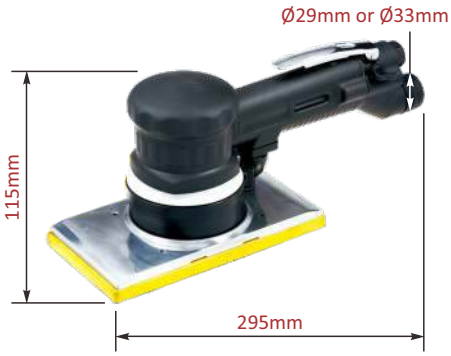

ZHS-CL4

0.5HP | Central-Vacuum

ZHS-SL4

0.5HP | Self-Generated Vacuum

Model	Dia. Orbit inch(mm)	Free Speed rpm	Avg. Air Cons. cfm	Noise Level db(A)	Vibration m/s²	Net Weight lbs(kgs)	Min. Hose Size inch(mm)	Air Inlet Size inch-NPT/PT
ZOS-927/927A	1/8(3.2)	8500	1.6	80	0.8	2.4(1.1)	3/8(10)	1/4
ZP356/356A	1/8(3.2)	8500	1.6	80	0.8	2.6(1.2)	3/8(10)	1/4
ZP356C	1/8(3.2)	8500	1.6	80	0.8	2.6(1.2)	3/8(10)	1/4
ZP356S	1/8(3.2)	8500	1.6	80	0.8	2.6(1.2)	3/8(10)	1/4
ZHS-NL4/NL4A	3/16(5)	7500	3.1	80	0.8	3.3(1.5)	3/8(10)	1/4
ZHS-CL4	3/16(5)	7500	3.1	80	0.8	3.3(1.5)	3/8(10)	1/4
ZHS-SL4	3/16(5)	7500	3.1	80	0.8	3.3(1.5)	3/8(10)	1/4

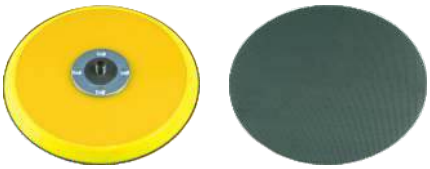

ZBTOB-38-6V0Y-T10
6" PAD Hook-up (No-Hole)

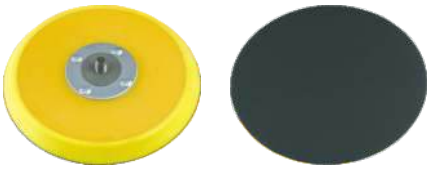

ZBTOB-38-5V0Y-T10
5" PAD Hook-up (No-Hole)

ZBTOB-38-6P0Y-T10
6" PAD PSA (No-Hole)

ZBTOB-38-5P0Y-T10
5" PAD PSA (No-Hole)

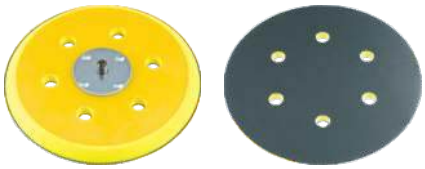

ZBTOB-38-6V6Y-T10
6" PAD Hook-up (6-Hole)

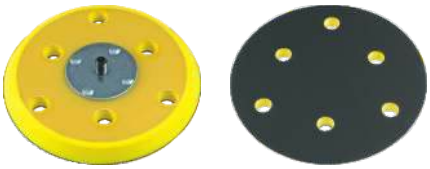

ZBTOB-38-5V6Y-T10
5" PAD Hook-up (6-Hole)

ZBTOB-38-6V7Y-T10
6" PAD Hook-up (7-Hole)

ZBTOB-38-5V7Y-T10
5" PAD Hook-up (7-Hole)

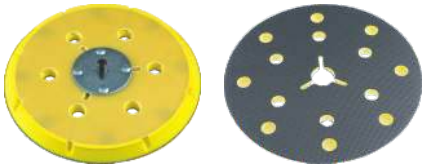

ZBTOB-38-6V15Y-T10
6" PAD Hook-up (15-Hole)

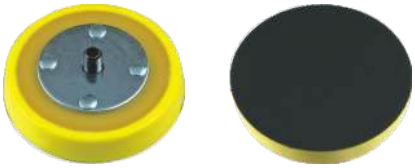

ZBTOB-38-3V0Y-W80
3" PAD Hook-up (No-Hole)

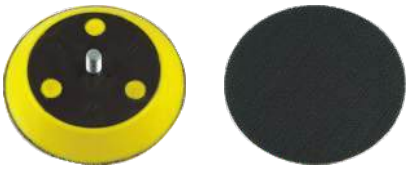

ZBTOB-38-3V0Y-W30
3" PAD Hook-up (No-Hole)

ZBTOB-38-3V3Y-W80
3" PAD Hook-up (3-Hole)

Products and specifications subject to change without prior notice

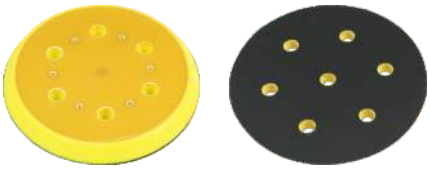

ZBT2HG-51-5V0Y
5" PAD Hook-up (No-Hole)

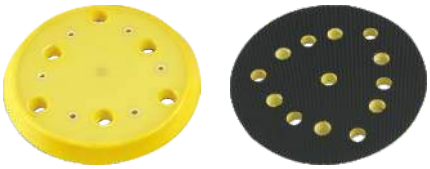

ZBT2HG-51-5V6Y
5" PAD Hook-up (6-Hole)

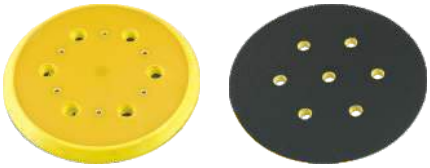

ZBT2HG-51-6V0Y
6" PAD Hook-up (No-Hole)

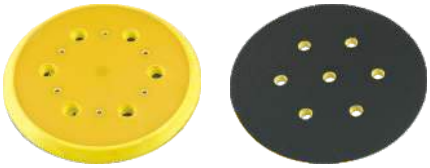

ZBT2HG-51-6P0Y
6" PAD PSA (No-Hole)

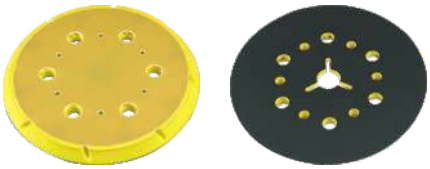

ZBT2HG4-49-6V7Y
6" PAD Hook-up (7-Hole)

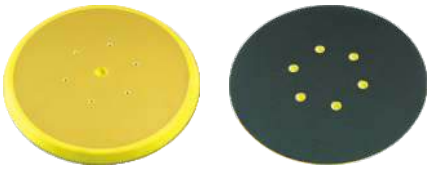

ZBT2HG4-49-8V0Y
8" PAD Hook-up (No-Hole)

ZBT2HG4-49-8V9Y
8" PAD Hook-up (9-Hole)

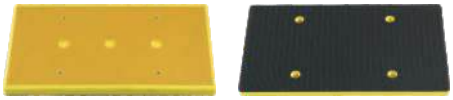

ZBTL4-40V-100*180-Y
Hook-up (No-Hole)
95mm x 175mm PAD

ZBTL4-40P-100*180-Y
PSA (No-Hole)
95mm x 175mm PAD

ZBTL4-40V-100*180-Y-3*2*3
Hook-up (8-Hole)
95mm x 175mm PAD

ZBTL4-40V-100*180-Y-4*4
Hook-up (8-Hole)
95mm x 175mm PAD

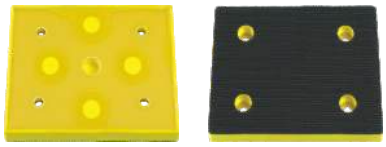

ZBT81339V-75*100-Y
Hook-up (No-Hole)
75mm x 100mm PAD

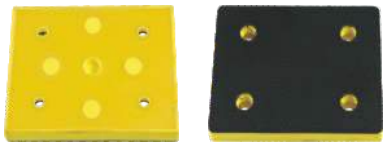

ZBT81339P-75*100-Y
PSA (No-Hole)
75mm x 100mm PAD

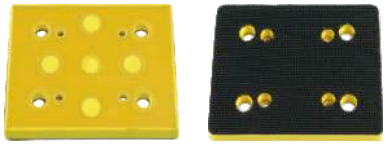

ZBT813S37V-75*100-Y
Hook-up (4-Hole)
75mm x 100mm PAD

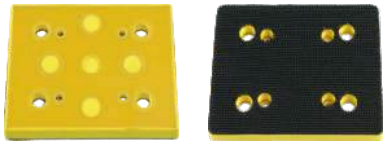

ZBT813S37P-75*100-Y
PSA (4-Hole)
75mm x 100mm PAD

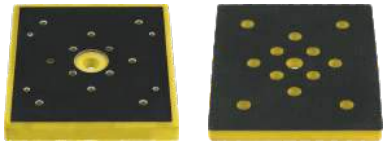

ZBT81438V-97*109-Y
Hook-up (No-Hole)
100mm x 110mm PAD

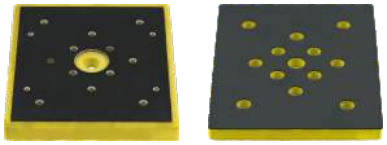

ZBT81438P-97*109-Y
PSA (No-Hole)
100mm x 110mm PAD

ZBT81539V-Y
Hook-up (No-Hole)
ZBT81539P-Y
PSA (No-Hole)
75mm x 100mm PAD

ZBT815S41-V-Y
Hook-up (No-Hole)
75mm x 100mm PAD

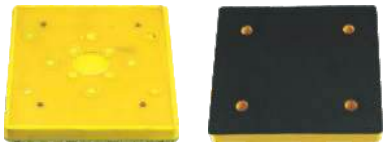

ZBT81642V-100*110*1.5-YV-100*110-Y
Hook-up (No-Hole)
100mm x 110mm PAD(PSA)

ZBT81642P-100*110*1.5-Y(PSA)
PSA (No-Hole)
100mm x 110mm PAD(PSA)

Products and specifications subject to change without prior notice

Air Sander Accessories

Sandpaper (75mm x 100mm)

ZP-813-4-0-80#	ZP-813-4-0-400#
ZP-813-4-0-100#	ZP-813-4-0-600#
ZP-813-4-0-120#	ZP-813-4-0-800#
ZP-813-4-0-150#	ZP-813-4-0-1000#
ZP-813-4-0-180#	ZP-813-4-0-1200#
ZP-813-4-0-240#	ZP-813-4-0-1500#
ZP-813-4-0-320#	

Sandpaper (75mm x 100mm)

ZP-813-4-4-80#	ZP-813-4-4-400#
ZP-813-4-4-100#	ZP-813-4-4-600#
ZP-813-4-4-120#	ZP-813-4-4-800#
ZP-813-4-4-150#	ZP-813-4-4-1000#
ZP-813-4-4-180#	ZP-813-4-4-1200#
ZP-813-4-4-240#	ZP-813-4-4-1500#
ZP-813-4-4-320#	

Sandpaper (100mm x 110mm)

ZP-814-4-0-80#	ZP-814-4-0-400#
ZP-814-4-0-100#	ZP-814-4-0-600#
ZP-814-4-0-120#	ZP-814-4-0-800#
ZP-814-4-0-150#	ZP-814-4-0-1000#
ZP-814-4-0-180#	ZP-814-4-0-1200#
ZP-814-4-0-240#	ZP-814-4-0-1500#
ZP-814-4-0-320#	

Sandpaper (75mm x 100mm)

ZP-815-3-0-80#	ZP-815-3-0-400#
ZP-815-3-0-100#	ZP-815-3-0-600#
ZP-815-3-0-120#	ZP-815-3-0-800#
ZP-815-3-0-150#	ZP-815-3-0-1000#
ZP-815-3-0-180#	ZP-815-3-0-1200#
ZP-815-3-0-240#	ZP-815-3-0-1500#
ZP-815-3-0-320#	

Sandpaper (75mm x 100mm)

ZP-815-3-4-80#	ZP-815-3-4-400#
ZP-815-3-4-100#	ZP-815-3-4-600#
ZP-815-3-4-120#	ZP-815-3-4-800#
ZP-815-3-4-150#	ZP-815-3-4-1000#
ZP-815-3-4-180#	ZP-815-3-4-1200#
ZP-815-3-4-240#	ZP-815-3-4-1500#
ZP-815-3-4-320#	

Sandpaper (95mm x 175mm)

ZP-L4-4-0-80#	ZP-L4-4-0-400#
ZP-L4-4-0-100#	ZP-L4-4-0-600#
ZP-L4-4-0-120#	ZP-L4-4-0-800#
ZP-L4-4-0-150#	ZP-L4-4-0-1000#
ZP-L4-4-0-180#	ZP-L4-4-0-1200#
ZP-L4-4-0-240#	ZP-L4-4-0-1500#
ZP-L4-4-0-320#	

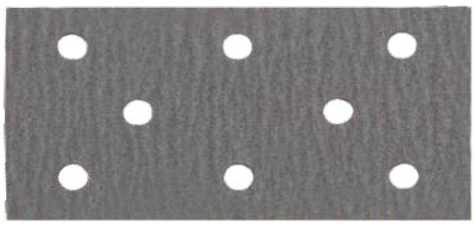

Sandpaper (95mm x 175mm)

ZP-L4-3X2X3-80#	ZP-L4-3X2X3-320#
ZP-L4-3X2X3-100#	ZP-L4-3X2X3-600#
ZP-L4-3X2X3-120#	ZP-L4-3X2X3-800#
ZP-L4-3X2X3-150#	ZP-L4-3X2X3-1000#
ZP-L4-3X2X3-180#	ZP-L4-3X2X3-1200#
ZP-L4-3X2X3-240#	ZP-L4-3X2X3-1500#

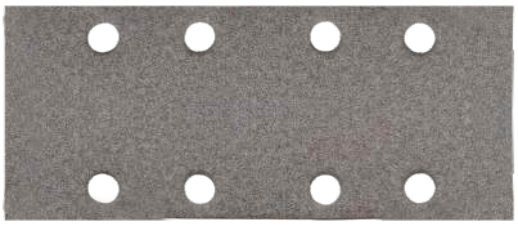

Sandpaper (95mm x 175mm)

ZP-L4-4x4-80#	ZP-L4-4x4-400#
ZP-L4-4x4-100#	ZP-L4-4x4-600#
ZP-L4-4x4-120#	ZP-L4-4x4-800#
ZP-L4-4x4-150#	ZP-L4-4x4-1000#
ZP-L4-4x4-180#	ZP-L4-4x4-1200#
ZP-L4-4x4-240#	ZP-L4-4x4-1500#
ZP-L4-4x4-320#	

Air Sander Accessories

Feature & Benefit

- Premium P-graded, heat-treated aluminum oxide abrasive for superior life, fast cut rate, and consistent finish.
- Unique fiber-reinforced, B-wt latex-saturated backing provides a 50-60% improvement in tear strength.
- Flexible; can be used wet.
- Water-based stearate, non-pigmented, No-Fil coating provides maximum load resistance and extended life with no color transfer to work.
- Typical applications include preparing primed and painted surfaces for finishing, stripping primer and paint, sanding plastic and fiberglass, and bare wood sanding.

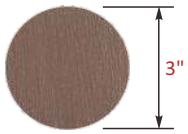

Sandpaper (3")

ZP-ZOS-3X0-80#	ZP-ZOS-3X0-400#
ZP-ZOS-3X0-100#	ZP-ZOS-3X0-600#
ZP-ZOS-3X0-120#	ZP-ZOS-3X0-800#
ZP-ZOS-3X0-150#	ZP-ZOS-3X0-1000#
ZP-ZOS-3X0-180#	ZP-ZOS-3X0-1200#
ZP-ZOS-3X0-240#	ZP-ZOS-3X0-1500#
ZP-ZOS-3X0-320#	

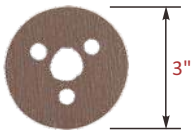

Sandpaper (3")

ZP-ZOS-3X4-80#	ZP-ZOS-3X4-400#
ZP-ZOS-3X4-100#	ZP-ZOS-3X4-600#
ZP-ZOS-3X4-120#	ZP-ZOS-3X4-800#
ZP-ZOS-3X4-150#	ZP-ZOS-3X4-1000#
ZP-ZOS-3X4-180#	ZP-ZOS-3X4-1200#
ZP-ZOS-3X4-240#	ZP-ZOS-3X4-1500#
ZP-ZOS-3X4-320#	

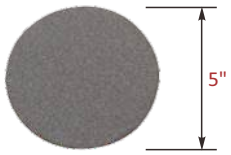

Sandpaper (5")

ZP-ZOS-5X0-80#	ZP-ZOS-5X0-400#
ZP-ZOS-5X0-100#	ZP-ZOS-5X0-600#
ZP-ZOS-5X0-120#	ZP-ZOS-5X0-800#
ZP-ZOS-5X0-150#	ZP-ZOS-5X0-1000#
ZP-ZOS-5X0-180#	ZP-ZOS-5X0-1200#
ZP-ZOS-5X0-240#	ZP-ZOS-5X0-1500#
ZP-ZOS-5X0-320#	

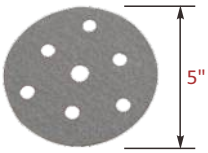

Sandpaper (5")

ZP-ZOS-5X7-80#	ZP-ZOS-5X7-400#
ZP-ZOS-5X7-100#	ZP-ZOS-5X7-600#
ZP-ZOS-5X7-120#	ZP-ZOS-5X7-800#
ZP-ZOS-5X7-150#	ZP-ZOS-5X7-1000#
ZP-ZOS-5X7-180#	ZP-ZOS-5X7-1200#
ZP-ZOS-5X7-240#	ZP-ZOS-5X7-1500#
ZP-ZOS-5X7-320#	

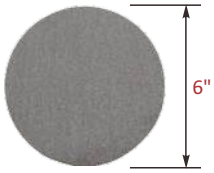

Sandpaper (6")

ZP-ZOS-6X0-80#	ZP-ZOS-6X0-400#
ZP-ZOS-6X0-100#	ZP-ZOS-6X0-600#
ZP-ZOS-6X0-120#	ZP-ZOS-6X0-800#
ZP-ZOS-6X0-150#	ZP-ZOS-6X0-1000#
ZP-ZOS-6X0-180#	ZP-ZOS-6X0-1200#
ZP-ZOS-6X0-240#	ZP-ZOS-6X0-1500#
ZP-ZOS-6X0-320#	

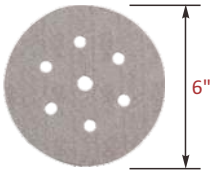

Sandpaper (6")

ZP-ZOS-6X7-80#	ZP-ZOS-6X7-400#
ZP-ZOS-6X7-100#	ZP-ZOS-6X7-600#
ZP-ZOS-6X7-120#	ZP-ZOS-6X7-800#
ZP-ZOS-6X7-150#	ZP-ZOS-6X7-1000#
ZP-ZOS-6X7-180#	ZP-ZOS-6X7-1200#
ZP-ZOS-6X7-240#	ZP-ZOS-6X7-1500#
ZP-ZOS-6X7-320#	

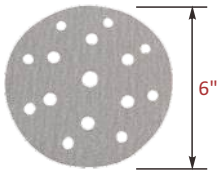

Sandpaper (6")

ZP-ZOS-6X15-80#	ZP-ZOS-6X15-400#
ZP-ZOS-6X15-100#	ZP-ZOS-6X15-600#
ZP-ZOS-6X15-120#	ZP-ZOS-6X15-800#
ZP-ZOS-6X15-150#	ZP-ZOS-6X15-1000#
ZP-ZOS-6X15-180#	ZP-ZOS-6X15-1200#
ZP-ZOS-6X15-240#	ZP-ZOS-6X15-1500#
ZP-ZOS-6X15-320#	

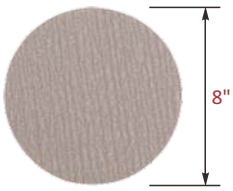

Sandpaper (8")

ZP-ZOS-8X0-80#	ZP-ZOS-8X0-400#
ZP-ZOS-8X0-100#	ZP-ZOS-8X0-600#
ZP-ZOS-8X0-120#	ZP-ZOS-8X0-800#
ZP-ZOS-8X0-150#	ZP-ZOS-8X0-1000#
ZP-ZOS-8X0-180#	ZP-ZOS-8X0-1200#
ZP-ZOS-8X0-240#	ZP-ZOS-8X0-1500#
ZP-ZOS-8X0-320#	

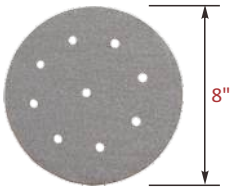

Sandpaper (8")

ZP-HG4-8X9-80#	ZP-HG4-8X9-400#
ZP-HG4-8X9-100#	ZP-HG4-8X9-600#
ZP-HG4-8X9-120#	ZP-HG4-8X9-800#
ZP-HG4-8X9-150#	ZP-HG4-8X9-1000#
ZP-HG4-8X9-180#	ZP-HG4-8X9-1200#
ZP-HG4-8X9-240#	ZP-HG4-8X9-1500#
ZP-HG4-8X9-320#	

Products and specifications subject to change without prior notice

Anti-Vibration Pads

VELCRO

12000 rpm maximum, 5/16"-24 male thread

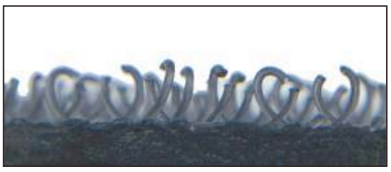

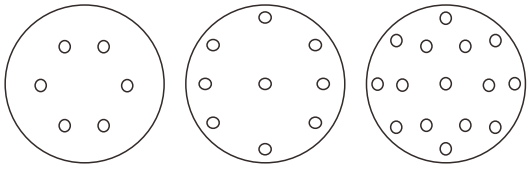

6 Hole 9 Hole 15 Hole

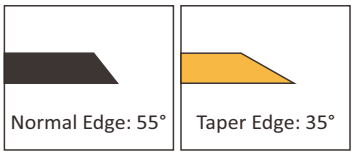

6" (152mm)

Model	Description	Thickness	Weight	Color
ZY-Q60-V/ZB-Q60-V	0 Hole	3/8"	130g/120g	Yellow/Black
ZY-Q66-V/ZB-Q66-V	6 Holes	3/8"	130g/120g	Yellow/Black
ZY-S66-V/ZB-S66-V	6 Holes Taper	3/8"	130g/120g	Yellow/Black
ZY-T609-V/ZB-T609-V	9 Holes	1/2"	130g/120g	Yellow/Black
ZY-T69-V/ZB-T69-V	15 Holes	1/2"	130g/120g	Yellow/Black

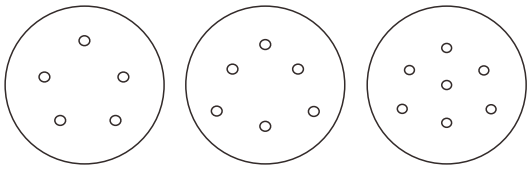

5 Hole 6 Hole 7 Hole

5" (125mm)

Model	Description	Thickness	Weight	Color
ZY-Q50-V/ZB-Q50-V	0 Hole	3/8"	130g/95g	Yellow/Black
ZY-Q55-V/ZB-Q55-V	5 Holes	3/8"	130g/95g	Yellow/Black
ZY-Q56-V/ZB-Q56-V	6 Holes	3/8"	130g/95g	Yellow/Black
ZY-Q57-V/ZB-Q57-V	7 Holes	3/8"	130g/95g	Yellow/Black

3" (75mm)

Model	Description	Thickness	Thread	Weight	Color
ZY-Q30-V6/ZB-Q30-V6	0 Hole	3/8"	M6	35g/25g	Yellow/Black
ZY-B30-V8/ZB-Q30-V8	0 Hole	3/8"	M8	35g/25g	Yellow/Black
ZB-T30-V	0 Hole	5/8"	M8	80g	Black

2" (48mm)

Model	Description	Thickness	Thread	Weight	Color
ZY-Q20-V6/ZB-Q20-V6	0 Hole	3/8"	M6	25g	Yellow/Black
ZY-Q20-V8/ZB-Q20-V8	0 Hole	3/8"	M8	25g	Yellow/Black

SUPER SOFT

6000 rpm maximum

Model	Description	Thickness	Weight	Color
ZO-Q66-V	6" 6 Holes	3/8"	130g/120g	Orange
ZO-S66-V	6" 6 Holes Taper	3/8"	130g/120g	Orange
ZO-Q50-V	5" 0 Hole	3/8"	130g/95g	Orange

Anti-Vibration Pads

PSA

12000 rpm maximum, 5/16"-24 male thread

Blue Vinyl

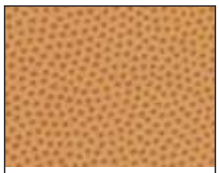
Basketball Vinyl

Black Dot

6" (152mm)

Model	Description	Thickness	Weight	Color
ZY-Q60-P/ZB-Q60-P	0 Hole Blue Vinyl	3/8"	130g/120g	Yellow/Black
ZY-Q60-C/ZB-Q60-C	0 Hole Basketball Vinyl	3/8"	130g/120g	Yellow/Black
ZY-Q60-D/ZB-Q60-D	0 Hole Black Vinyl	3/8"	130g/120g	Yellow/Black

5" (125mm)

Model	Description	Thickness	Weight	Color
ZY-Q50-P/ZB-Q50-P	0 Hole Blue Vinyl	3/8"	130g/95g	Yellow/Black
ZY-Q50-C/ZB-Q50-C	0 Hole Basketball Vinyl	3/8"	130g/95g	Yellow/Black
ZY-Q50-D/ZB-Q50-D	0 Hole Black Vinyl	3/8"	130g/95g	Yellow/Black

3" (75mm)

Model	Description	Thickness	Thread	Weight	Color
ZY-Q30-P6/ZB-Q30-P6	0 Hole Blue Vinyl	3/8"	M6	35g/25g	Yellow/Black
ZY-Q30-P8/ZB-Q30-P8	0 Hole Blue Vinyl	3/8"	M8	35g/25g	Yellow/Black
ZY-Q30-C6/ZB-Q30-C6	0 Hole Basketball Vinyl	3/8"	M6	35g/25g	Yellow/Black
ZY-Q30-C8/ZB-Q30-C8	0 Hole Basketball Vinyl	3/8"	M8	35g/25g	Yellow/Black

2" (48mm)

Model	Description	Thickness	Thread	Weight	Color
ZY-Q20-P6/ZB-Q20-P6	0 Hole Blue Vinyl	3/8"	M6	25g	Yellow/Black
ZY-Q20-P8/ZB-Q20-P8	0 Hole Blue Vinyl	3/8"	M8	25g	Yellow/Black
ZY-Q20-C6/ZB-Q20-C6	0 Hole Basketball Vinyl	3/8"	M6	25g	Yellow/Black
ZY-Q20-C8/ZB-Q20-C8	0 Hole Basketball Vinyl	3/8"	M8	25g	Yellow/Black

SUPER SOFT

6000 rpm maximum

Model	Description	Thickness	Weight	Color
ZO-Q60-P	6" 0 Hole Blue Vinyl	3/8"	130g/120g	Orange
ZO-Q50-P	5" 0 Hole Blue Vinyl	3/8"	130g/95g	Orange
ZO-Q60-C	6" 0 Hole Basketball Vinyl	3/8"	130g/120g	Orange
ZO-Q50-C	5" 0 Hole Basketball Vinyl	3/8"	130g/95g	Orange
ZO-Q60-D	6" 0 Hole Black Vinyl	3/8"	130g/120g	Orange
ZO-Q50-D	5" 0 Hole Black Vinyl	3/8"	130g/95g	Orange

Products and specifications subject to change without prior notice

Anti-Vibration Pads

SHORT NAP

12000 rpm maximum, 5/16"-24 male thread

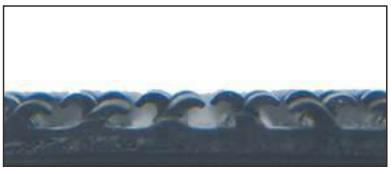

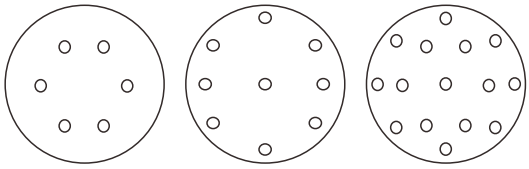

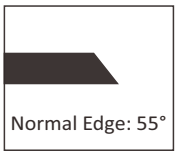

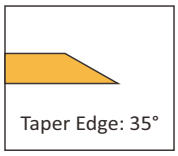

6" (152mm)

Model	Description	Thickness	Weight	Color
ZY-Q60-E/ZB-Q60-E	0 Hole	3/8"	130g/120g	Yellow/Black
ZY-Q66-E/ZB-Q66-E	6 Holes	3/8"	130g/120g	Yellow/Black
ZY-S66-SV/ZB-S66-SV	6 Holes Taper	3/8"	130g/120g	Yellow/Black
ZY-T609-E/ZB-T609-E	9 Holes	1/2"	130g/120g	Yellow/Black
ZY-T69-E/ZB-T69-E	15 Holes	1/2"	130g/120g	Yellow/Black

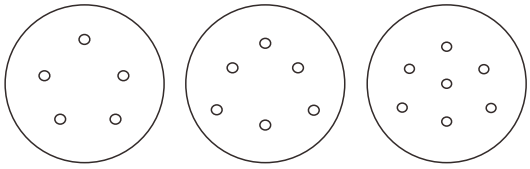

5" (125mm)

Model	Description	Thickness	Weight	Color
ZY-Q50-E/ZB-Q50-E	0 Hole	3/8"	130g/95g	Yellow/Black
ZY-Q55-E/ZB-Q55-E	5 Holes	3/8"	130g/95g	Yellow/Black
ZY-Q56-E/ZB-Q56-E	6 Holes	3/8"	130g/95g	Yellow/Black
ZY-Q57-E/ZB-Q57-E	7 Holes	3/8"	130g/95g	Yellow/Black

3" (75mm)

Model	Description	Thickness	Thread	Weight	Color
ZY-Q30-E6/ZB-Q30-E6	0 Hole	3/8"	M6	35g/25g	Yellow/Black
ZY-Q30-E6/ZB-Q30-E8	0 Hole	3/8"	M8	35g/25g	Yellow/Black

2" (48mm)

Model	Description	Thickness	Thread	Weight	Color
ZY-Q20-E6/ZB-Q20-E6	0 Hole	3/8"	M6	25g	Yellow/Black
ZY-Q20-E8/ZB-Q20-E8	0 Hole	3/8"	M8	25g	Yellow/Black

Robot Arm / Air Tapping Tools

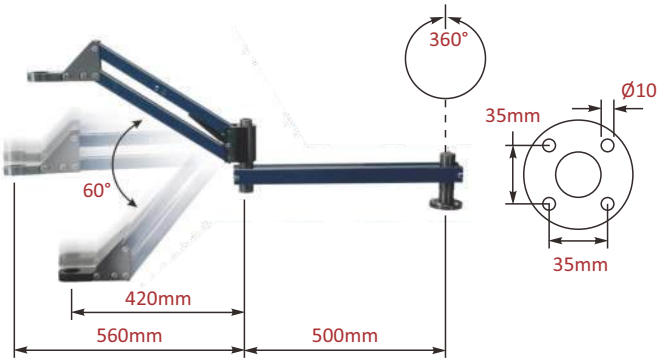

RB27
Robot Arm

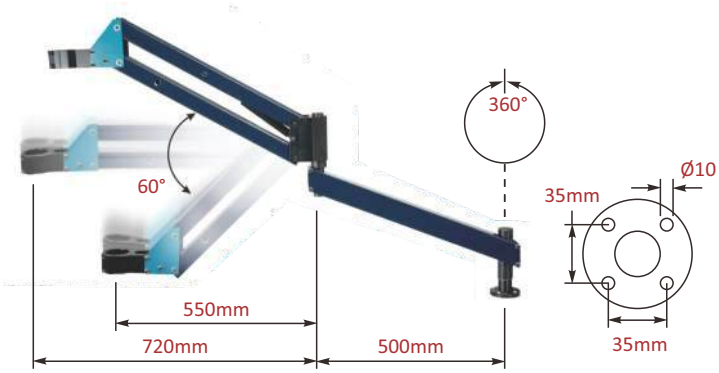

RB35
Robot Arm

Model	Clamping Jaw	Tool Diameter mm	Net Weight lbs(kgs)
RB27		38/44	13(5.89)
RB35		56.6	23.7(10.75)

Handle exhaust

ZAT22AKH
3/8" Air Tapping Tool

Push to start type
Rear exhaust

ZAT415B2
3/8" Air Tapping Tool

Handle exhaust

ZAT712AKI
3/8" Air Tapping Tool

Model	Tapping Capacity		Free Speed rpm	Avg. Air Cons. cfm(l/min)	Overall Length inch(mm)	Noise Level db(A)	Net Weight lbs(kgs)	Air Inlet Size inch-NPT/PT
	Aluminum/mm	Iron/mm						
ZAT22AKH	3-12	3-8	150	6.5(184)	7.87(200)	82	3.79(1.72)	1/4
ZAT415B2	1-3	1-3	1000	5(141)	11.02(280)	77	1.63(0.74)	1/4
ZAT712AKI	6-12	6-8	150	7(198)	9.65(245)	82	3.9(1.77)	1/4

- Specification(air pressure at 90psi, 6.2bar, 6.3kg/cm²)

Products and specifications subject to change without prior notice

Air Tapping Tools

Handle exhaust

ZAT22AK
Air Tapping Tool

Rear exhaust

ZAT19AK / ZAT23AK
Air Tapping Tool

Please specify tapping tool code
& chuck standard while ordering.

Air Tapping Tool Order Code Reference

Model	ZAT22AK	ZAT19AK	ZAT23AK
Size	Order Code		
M2		ZAT19AK-2	
M3	ZAT22AK-3	ZAT19AK-3	ZAT23AK-3
M4	ZAT22AK-4	ZAT19AK-4	ZAT23AK-4
M5	ZAT22AK-5	ZAT19AK-5	ZAT23AK-5
M6	ZAT22AK-6	ZAT19AK-6	ZAT23AK-6
M8	ZAT22AK-8	ZAT19AK-8	ZAT23AK-8
M10	ZAT22AK-10		ZAT23AK-10
M12	ZAT22AK-12		ZAT23AK-12

NOTICE:
When different sizes or standard chucks are needed, please refer to the chuck standards and size list and note on the purchase order, otherwise, the chuck will be JIS.

Chuck standards and size list

FOR TAP	JIS			ISO			DIN 371			DIN 376		
Thread	Ød	□	Order Code	Ød	□	Order Code	Ød	□	Order Code	Ød	□	Order Code
M2	3	2.5	TCJISM2									
M3	4	3.2	TCJISM3	3.15	2.5	TCISOM3	3.5	2.7	TCDIN371M3	2.2	–	TCDIN376M3
M4	5	4	TCJISM4	4	3.15	TCISOM4	4.5	3.4	TCDIN371M4	2.8	2.1	TCDIN376M4
M5	5.5	4.5	TCJISM5	5	4	TCISOM5	6	4.9	TCDIN371M5	3.5	2.7	TCDIN376M5
M6	6	4.5	TCJISM6	6.3	5	TCISOM6	6	4.9	TCDIN371M6	4.5	3.4	TCDIN376M6
M8	6.2	5	TCJISM8	8	6.3	TCISOM8	8	6.2	TCDIN371M8	6	4.9	TCDIN376M8
M10	7	5.5	TCJISM10	10	8	TCISOM10	10	8	TCDIN371M10	7	5.5	TCDIN376M10
M12	8.5	6.5	TCJISM12	9	7.1	TCISOM12				9	/	TCDIN376M12
FOR TAP	JIS											
Thread	Ød	□	Order Code									
1/2"	9.322	6.985	TCANSIW1/2									

Model	Tapping Capacity		Free Speed rpm	Avg. Air Cons. cfm(l/min)	Overall Length inch(mm)	Noise Level db(A)	Net Weight lbs(kgs)	Air Inlet Size inch-NPT/PT
	Aluminum/mm	Iron/mm						
ZAT22AK	3-12	3-8	150	6.5(184)	10.04(255)	82	3.81(1.73)	1/4
ZAT19AK	2-8	2-4	350	8(226)	11.42(290)	87	3.7(1.68)	1/4
ZAT23AK	3-12	3-10	100	8(226)	12.2(310)	87	4.1(1.86)	1/4

- Specification(air pressure at 90psi, 6.2bar, 6.3kg/cm²)

Adjustable Torque Tapping Chuck

Patented
PRODUCT

JIS, ISO, DIN371, DIS376, ANSI all standards chuck and sizes can using

For { Drilling Machine
Electric Drill
Air Drill

ZPTC-DT6
Professional Tapping Chuck

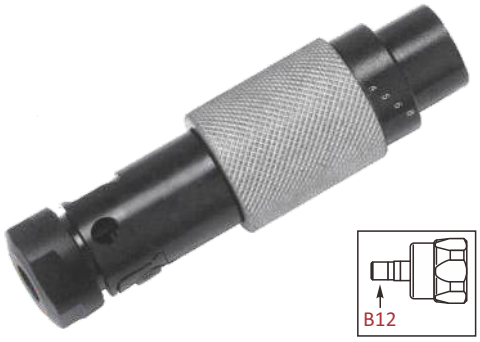

ZPTC-B12A
Professional Tapping Chuck

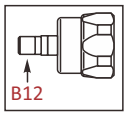

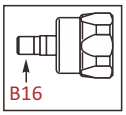

ZATC-B12B / ZATC-B16C
Adjustable Tapping Chuck

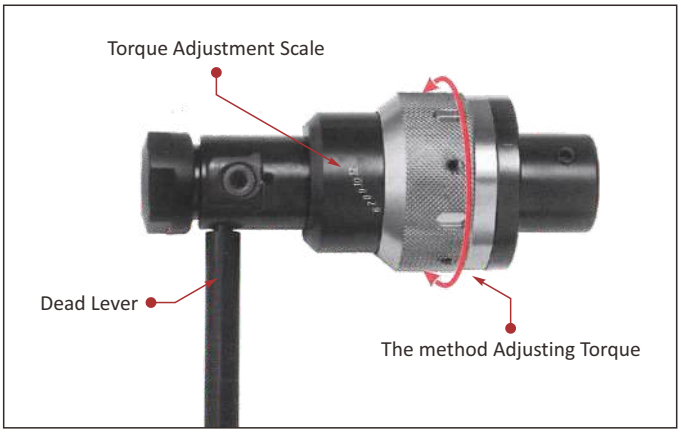

Model	Tapping Size mm	Overall Length inch(mm)	Net Weight lbs(kgs)
ZPTC-DT6	3~8	4.72(120)	1.32(0.6)
ZPTC-B12A	3~8	4.72(120)	1.32(0.6)
ZATC-B12B	3~12	4.72(120)	1.9(0.86)
ZATC-B16C	3~12	4.72(120)	1.9(0.86)

- Specification(air pressure at 90psi, 6.2bar, 6.3kg/cm²)

Products and specifications subject to change without prior notice

Torque collet Chuck

METRIC THREAD					
No.1 Torque collet Chuck		JIS		ISO	
		Handle Diameter	Opposite	Handle Diameter	Opposite
M3	P0.5	4	3.2	3.15	2.5
M4	P0.7	5	4	4	3.15
M5	P0.8	5.5	4.5	5	4
M6	P1.0	6	4.5	6.3	5
M8	P1.25	6.2	5	8	6.3
M10	P1.5	7	5.5	10	8
M12	P1.75	8.5	6.5	9	7.1

METRIC THREAD					
No.2 Torque collet Chuck		JIS		ISO	
		Handle Diameter	Opposite	Handle Diameter	Opposite
M14	P2.0	10.5	8	11.2	9
M16	P2.0	12.5	10	12.5	10
M18	P2.5	14	11	14	11.2
M20	P2.5	15	12	14	11.2
M22	P2.5	17	13	16	12.5
M24	P3.0	19	15	18	14

METRIC THREAD					
No.3 Torque collet Chuck		JIS		ISO	
		Handle Diameter	Opposite	Handle Diameter	Opposite
M30	P3.5	23	17	20	16
M32		24	19		
M33	P3.5	25	19		
M34		26	21		
M35		26	21		
M36		28	21		
M38		28	21		
M39		30	23		
M40		30	23		
M42	P4.5	32	26		

IMPERIAL THREAD		
Torque collet Chuck	JIS	
	Handle Diameter	Opposite
W 1/8	4	3.2
W 3/16	5.5	4.5
W 1/4	6	4.5
W 5/16	6.1	5
W 3/8	7	5.5
W 7/16	8	6
W 1/2	9	7
W 9/16	10.5	8
W 5/8	12	9
W 3/4	14	11
W 7/8	17	13
W 1	20	15
W 1-1/8	22	17
W 1-1/4	24	19
W 1-3/8	26	21
W 1-1/2	30	23
W 1-5/8	32	26

JIS Pipe / Tube				
PT	PS	PF	Handle Diameter	Opposite
1/8	1/8	1/8	8	6
1/4	1/4	1/4	11	9
3/8	3/8	3/8	14	11
1/2	1/2	1/2	18	14
		5/8	19	15
5/8			20	15
3/4	3/4	3/4	23	17
		7/8	24	19
1	1	1	26	21
	1-1/8	1-1/8	28	21
1-1/4	1-1/4	1-1/4	32	26
1-3/8	1-3/8	1-3/8	35	26
1-1/2	1-1/2	1-1/2	38	29

Industrial Angle Grinder

0.9HP

ZAG4140AF / ZAG4140AM
ZAG5110AF / ZAG5110AM
ZAG5110AC / ZAG5110AP

0.9HP

ZAG4140BF / ZAG4140BM
ZAG5110BF / ZAG5110BM
ZAG5110BC / ZAG5110BP

ZAG7075AC 2.0HP
ZAG7075AN / ZAG7075AP
ZAG9060AC 2.5HP
ZAG9060AP / ZAG9060AN

ZAG7075BC 2.0HP
ZAG7075BN / ZAG7075BP
ZAG9060BC 2.5HP
ZAG9060BP / ZAG9060BN

ZAG460AC 0.9HP

ZAG460BC 0.9HP

Model	Throttle Type	Grinding Wheel inch(mm)	Spindle Thread Size	Free Speed rpm	Max.Air Cons. cfm(m^3/min)	Angle Head Height inch(mm)	Overall Length inch(mm)	Net Weight lbs(kgs)
ZAG4140AF	Roll	4(100)	3/8x24UNF	13600	33(0.95)	3(76)	8-3/16(208)	4.41(2)
ZAG4140AM	Roll	4(100)	M8x1.25P	13600	33(0.95)	3(76)	8-3/16(208)	4.41(2)
ZAG4140BF	Lever	4(100)	3/8x24UNF	13600	33(0.95)	3(76)	9-11/16(246)	3.75(1.7)
ZAG4140BM	Lever	4(100)	M8x1.25P	13600	33(0.95)	3(76)	9-11/16(246)	3.75(1.7)
ZAG5110AF	Roll	5(125)	3/8x24UNF	10900	33(0.95)	3(76)	8-3/16(208)	3.97(1.8)
ZAG5110AM	Roll	5(125)	M8x1.25P	10900	33(0.95)	3(76)	8-3/16(208)	3.97(1.8)
ZAG5110AC	Roll	5(125)	5/8x11UNC	10900	33(0.95)	3(76)	8-3/16(208)	3.97(1.8)
ZAG5110AP	Roll	5(125)	M14x2.0P	10900	33(0.95)	3(76)	8-3/16(208)	3.97(1.8)
ZAG5110BF	Lever	5(125)	3/8x24UNF	10900	33(0.95)	3(76)	9-11/16(246)	3.53(1.6)
ZAG5110BM	Lever	5(125)	M8x1.25P	10900	33(0.95)	3(76)	9-11/16(246)	3.53(1.6)
ZAG5110BC	Lever	5(125)	5/8x11UNC	10900	33(0.95)	3(76)	8-3/16(208)	4.63(2.1)
ZAG5110BP	Lever	5(125)	M14x2.0P	10900	33(0.95)	3(76)	8-3/16(208)	4.63(2.1)
ZAG7075AC	Roll	7(180)	5/8x11UNC	7600	56(1.6)	3-27/64(87)	10(253)	8.93(4.05)
ZAG7075AN	Roll	7(180)	M10x1.5P	7600	56(1.6)	3-27/64(87)	10(253)	8.93(4.05)
ZAG7075AP	Roll	7(180)	M14x2.0P	7600	56(1.6)	3-27/64(87)	10(253)	8.93(4.05)
ZAG7075BC	Lever	7(180)	5/8x11UNC	7600	56(1.6)	3-27/64(87)	11-13/16(300)	8.36(3.79)
ZAG7075BN	Lever	7(180)	M10x1.5P	7600	56(1.6)	3-27/64(87)	11-13/16(300)	8.36(3.79)
ZAG7075BP	Lever	7(180)	M14x2.0P	7600	56(1.6)	3-27/64(87)	10(253)	8.36(3.79)
ZAG9060AC	Roll	9(230)	5/8x11UNC	5900	67(1.9)	4-1/2(115)	11(280)	9.52(4.32)
ZAG9060AN	Roll	9(230)	M10x1.5P	5900	67(1.9)	4-1/2(115)	11(280)	9.52(4.32)
ZAG9060AP	Roll	9(230)	M14x2.0P	5900	67(1.9)	4-1/2(115)	11(280)	9.52(4.32)
ZAG9060BC	Lever	9(230)	5/8x11UNC	5900	67(1.9)	4-1/2(115)	12-13/64(310)	8.95(4.06)
ZAG9060BN	Lever	9(230)	M10x1.5P	5900	67(1.9)	4-1/2(115)	12-13/64(310)	8.95(4.06)
ZAG9060BP	Lever	9(230)	M14x2.0P	5900	67(1.9)	4-1/2(115)	12-13/64(310)	8.95(4.06)
ZAG460AC	Roll	–	5/8x11UNC	6000	33(0.95)	3-55/64(98)	8-3/16(208)	3.09(1.4)
ZAG460BC	Lever	–	5/8x11UNC	6000	33(0.95)	3-55/64(98)	8-3/16(208)	3.09(1.4)

Products and specifications subject to change without prior notice

Industrial Angle Grinder

NEW PRODUCT

Features & Benefits

- High torque 2.5HP (1.9kW) motor output.
- Governed motor & Safety lever for operator safety.
- Spindle lock design for easy disc change.
- Vibration damped & Balanced side handle.

ZAG636 2.5HP
5" Angle Grinder
*Grinding Wheel not included

ZAG6368 2.5HP
7" Angle Grinder
*Grinding Wheel not included

Features & Benefits

- High efficient turbine motor for effective grinding & material removal.
- Autobalancer to minimize vibration for operator comfort.
- Adjustable guard.
- Governed motor & Safety lever for operator safety.
- Integrated Autobalancer & Overspeed shut-off device.

ZTG638 6.1HP
7" Turbine Angle Grinder
*Grinding Wheel not included

ZTG630 6.1HP
9" Turbine Angle Grinder
*Grinding Wheel not included

Model	Grinding Wheel	Spindle Thread Size	Free Speed rpm	Air Cons. cfm(m³/min)	Noise Level dB(A)	Overall Length inch(mm)	Net Weight lbs(kgs)	Air Inlet Thread Size
ZAG636	5"	M14*2.0P	11000	5(0.14)	<90	10.4(265)	2.2(4.85)	3/8"
ZAG6368	7"	M14*2.0P	7500	5(0.14)	<90	10.4(265)	2.5(5.51)	3/8"
ZTG638	7"	–	8500	Free 42(1.19) Max. 126(3.57)	90	12.4(315)	3.8(8.38)	1/2"
ZTG630	9"	–	6600	Free 42(1.19) Max. 126(3.57)	90	12.4(315)	4(8.82)	1/2"

Industrial Vertical Grinder

ZVG5120-BC 1.4HP 5/8-11UNC
ZVG5120-BP 1.4HP M14 x 2.0P

ZVG770-BC 2.0HP 5/8-11UNC
ZVG784-BC 2.0HP 5/8-11UNC
ZVG770-BP 2.0HP M14 x 2.0P
ZVG784-BP 2.0HP M14 x 2.0P

ZVG960B 4.0HP
ZVG945B 3.8HP

ZVG660B 4.0HP
ZVG645B 3.8HP

Model	Grinding Wheel mm	Max. Dia Cup Wheel mm	Free Speed rpm	Max.Air Cons. cfm(m^3/min)	Net Weight lbs(kgs)	Min. Hose Size inch(mm)
ZVG5120-BC	125x6x22.2	–	12000	42.4(1.2)	6.17(2.8)	1/2(12.7)
ZVG5120-BP	125x6x22.2	–	12000	42.4(1.2)	6.17(2.8)	1/2(12.7)
ZVG770-BC	180x6x22.2	–	7000	56.5(1.6)	8.82(4)	1/2(12.7)
ZVG770-BP	180x6x22.2	–	7000	56.5(1.6)	8.82(4)	1/2(12.7)
ZVG784-BC	180x6x22.2	–	8400	56.5(1.6)	8.82(4)	1/2(12.7)
ZVG784-BP	180x6x22.2	–	8400	56.5(1.6)	8.82(4)	1/2(12.7)
ZVG960B	230x10x22.2	–	6000	98.9(2.8)	12.79(5.8)	3/4(19)
ZVG945B	230x10x22.2	–	4500	87.7(2.4)	12.79(5.8)	3/4(19)
ZVG660B	–	150x50x22.2	6000	98.9(2.8)	13.01(5.9)	3/4(19)
ZVG645B	–	150x50x22.2	4500	87.7(2.4)	13.01(5.9)	3/4(19)

Products and specifications subject to change without prior notice

Industrial Straight Grinder

ZSG-105A 1.3HP
Industrial Straight Grinder
ZSG-106A 1.4HP
Industrial Straight Grinder
Roll Throttle Type

ZSG-105B 1.3HP
Industrial Straight Grinder
ZSG-106B 1.4HP
Industrial Straight Grinder
Lever Throttle Type

ZSG206B 1.4HP
Industrial Straight Grinder
Lever Throttle Type

ZSG306B 1.4HP
Industrial Straight Grinder
Lever Throttle Type

Model	Throttle Type	Grinding Wheel inch(mm)	Spindle Thread Size	Free Speed rpm	Max.Air Cons. SCFM	Overall Length inch(mm)	Net Weight lbs(kgs)	Air Hose Size	Air Inlet Thread Size
ZSG-105A	Roll	5x3/4x1/2 (125x19x12.7)	1/2x12	7600	20	15-3/4(400)	2.79(1.27)	12.7	3/8
ZSG-105B	Lever	5x3/4x1/2 (125x19x12.7)	1/2x12	7600	20	19-11/16(501)	2.79(1.27)	12.7	3/8
ZSG-106A	Roll	6x1x5/8 (150x25x15.8)	5/8x11	6300	24	16-47/64(425)	4.14(1.88)	12.7	3/8
ZSG-106B	Lever	6x1x5/8 (150x25x15.8)	5/8x11	6300	24	20-33/64(521)	4.14(1.88)	12.7	3/8
ZSG206B	Lever	6x1x5/8 (150x25x15.8)	5/8x11	6300	24	20(510)	3.27(1.48)	12.7	3/8
ZSG306B	Lever	5/8" Cone Wheel	5/8x11	6300	24	20(510)	4.1(1.86)	12.7	3/8

Air Needle / Chisel Scalers

High power, quality design

Features & Benefits

- Texturing concrete
- Cleaning & stress relieving weld seams and joints
- Removing coatings, corrosion & other accumulated materials
- Chisel scalers for splitting, chipping, pointing and brick raking
- Convert to chisels in seconds
- Dust shroud attachments available
- Adjustable front tube extends needle life
- Heat treated piston and cylinder ensure excellent durability and long life

Air Needle / Chisel Scalers

ZKJ221-19 / ZKJ221-29
ZKJ221A Vacuum Type
Medium Duty Pistol Grip Needle Scaler

ZKJ3221-19 / ZKJ3221-28
Heavy Duty Pistol Grip Needle Scaler

ZKJ222
Medium Duty Chisel Scaler

ZKJ3222
Heavy Duty Chisel Scaler

ZKJ799NS-12 / ZKJ799NS-27
Light Duty Needle Scaler

ZKJ211-2B-19 / ZKJ211-2B-29
ZKJ211A Vacuum Type
Medium Duty Needle Scaler

Chisel Shank 0.5"(12.7mm)

Vacuum System

Needle scalers can be fitted with dust shroud

Model	Numbers of Needles pcs	Piston Diameter inch(mm)	Piston Stroke inch(mm)	Needle Diameter Øinch(mm)	Blows Per Min. bpm	Avg. Air Cons. cfm(l/min)	Overall Length inch(mm)	Net Weight lbs(kgs)
ZKJ3221-19	19	1.2(29.5)	0.86(22)	5/32x7(4x180)	2700	3(85)	13.4(340)	8.6(3.9)
ZKJ3221-28	28	1.2(29.5)	0.86(22)	1/8x7(3x180)	2700	3(85)	13.4(340)	8.6(3.9)
ZKJ3222	–	1.2(29.5)	0.86(22)	–	2000	2(51)	11.6(295)	6(2.7)
ZKJ221-19	19	0.9(23)	1.3(33)	1/8x7(3x180)	3700	3(85)	13(330)	6(2.7)
ZKJ221-29	29	0.9(23)	1.3(33)	5/64x7(2x180)	3700	3(85)	13(330)	6(2.7)
ZKJ221A	–	0.9(23)	1.3(33)	–	3700	3(85)	13(330)	6(2.7)
ZKJ222	–	0.9(23)	1.3(33)	–	2700	3(85)	11.6(295)	4.8(2.2)
ZKJ211-2B-19	19	0.9(23)	1.3(33)	1/8x7(3x180)	3700	3(85)	14.8(375)	6.2(2.8)
ZKJ211-2B-29	29	0.9(23)	1.3(33)	5/64x7(2x180)	3700	3(85)	14.8(375)	6.2(2.8)
ZKJ211A	–	0.9(23)	1.3(33)	–	3700	3(85)	14.8(375)	6.2(2.8)
ZKJ799NS-12	12	0.7(18)	1(26)	1/8x7(3x180)	4200	2(60)	14.2(360)	3.5(1.6)
ZKJ799NS-27	27	0.7(18)	1(26)	5/64x7(2x180)	4200	2(60)	14.2(360)	3.5(1.6)

Warning: Facial and operation of pneumatic tools, must wear eye protection.
Recommended air pressure must equal or below @90psi (6.2 bar).

- Min. Hose Size: 3/8(10) inch(mm)
- Air Inlet Size: 1/4 inch-NPT/PT

Air Chisel Scalers / Air Scraper / Air Flux Chipper

ZKJ211
Medium Duty Chisel Scaler

ZKJ799F
Light Duty Chisel Scaler

ZFC-2540
Air Chisel Scaler

Model	Piston Diameter inch(mm)	Piston Stroke inch(mm)	Blows Per Min. bpm	Avg. Air Cons. cfm(l/min)	Overall Length inch(mm)	Net Weight lbs(kgs)	Min. Hose Size inch(mm)	Air Inlet Size inch-NPT/PT
ZKJ211	0.9(23)	1.3(33)	2700	3(85)	13.2(335)	4.8(2.2)	3/8(10)	1/4
ZKJ799F	0.7(18)	1(26)	3800	2.5(70)	13(330)	3.5(1.6)	3/8(10)	1/4
ZFC-2540	63/64(25)	1-11/32(34)	4000	14(392)	7-1/2(190)	3.3(1.5)	3/8(10)	1/4

Warning: Facial and operation of pneumatic tools, must wear eye protection.
Recommended air pressure must equal or below @90psi (6.2 bar).

ZAS132
Air Flux Chipper

ZP232 0.15HP
Air Scraper

ZFC-2
Air Scraper

ZP232K Air Scraper Kit

Model	Bore Diameter inch(mm)	Piston Diameter inch(mm)	Stroke Length inch(mm)	Blows Per Min. bpm	Avg. Air Cons. cfm(l/min)	Net Weight lbs(kgs)	Min. Hose Size inch(mm)	Air Inlet Size inch-NPT/PT
ZAS132	(18x14)	–	15/16(24)	2800	2.12(60)	2.0(0.9)	3/8(10)	1/4
ZCF-2	–	0.87(22)	0.87(22)	4000	8.8(250)	2.56(1.16)	3/8(10)	1/4
ZP232	1/2(12.7)	–	1/4(6.3)	4800	2.8(80)	1.59(0.72)	3/8(10)	1/4

- Specification(air pressure at 90psi, 6.2bar, 6.3kg/cm²)

Products and specifications subject to change without prior notice

Air Needle Scalers

Features & Benefits

- Needle scaler for industrial application
- Sturdy and simple design for heavy and wide applications
- Superior design with internal spring components provides greater durability

ZKJ27
Pistol Grip Needle Scaler

ZNS1919
Air Needle Scalers

ZKJ35-23 / ZKJ35-53
Pistol Grip Needle Scaler

ZKJ39-14 / ZKJ39-28
ZKJ39-66 / ZKJ39A Vacuum Type
Pistol Grip Needle Scaler

ZNS1919C
Air Needle Scalers

ZKJ831
Pistol Grip Needle Scaler

Vacuum System

Needle scalers can be fitted with dust shroud

ZNS-4111
PENCIL NEEDLE SCALER
w/ Inline air flow regulator

Application:
- Gentle cleaning of soiled/rusted parts
- Pin form and free needles allow you to reach difficult-to-access areas as well

ZNS-1228
Air Needle Scalers

ZKJ31-12 / ZKJ31-27
Composite Straight Needle Scaler

Model	Numbers of Needles pcs	Piston Diameter inch(mm)	Piston Stroke inch(mm)	Needle Diameter Øinch(mm)	Blows Per Min. bpm	Avg. Air Cons. cfm(l/min)	Overall Length inch(mm)	Net Weight lbs(kgs)
ZKJ27	19	0.6(16)	0.6(16)	5/64x7(2x180)	4000	2.5(70)	11.2(285)	3.5(1.6)
ZKJ31-12	12	0.8(20)	1.06(27)	1/8x7(3x180)	4000	4(115)	13.6(345)	5.3(2.4)
ZKJ31-27	27	0.8(20)	1.06(27)	5/64x7(2x180)	4000	4(115)	13.6(345)	5.3(2.4)
ZKJ35-23	23	0.94(24)	1.06(27)	1/8x7(3x180)	4000	7(198)	13.2(335)	6.2(2.8)
ZKJ35-53	53	0.94(24)	1.06(27)	5/64x7(2x180)	4000	7(198)	13.2(335)	6.2(2.8)
ZKJ39-14	14	1.1(28)	1.1(28)	5/32x7(4x180)	3500	7.4(210)	13.8(350)	7.9(3.6)
ZKJ39-28	28	1.1(28)	1.1(28)	1/8x7(3x180)	3500	7.4(210)	13.8(350)	7.9(3.6)
ZKJ39-66	66	1.1(28)	1.1(28)	5/64x7(2x180)	3500	7.4(210)	13.8(350)	7.9(3.6)
ZKJ39A	–	1.1(28)	1.1(28)	–	3500	7.4(210)	13.8(350)	7.9(3.6)
ZKJ831	19	0.75(19)	2.7(70)	1/8x7(3x180)	3500	6.6(187)	14.6(370)	6(2.7)
ZNS-1228	12	0.75(19)	1.6(41)	1/8x4.9(3x126)	2800	2.1(60)	11.6(295)	2.4(1.1)
ZNS1919	19	0.75(19)	1.6(41)	1/8x7(3x180)	4000	7.4(210)	12(305)	4.9(2.2)
ZNS1919C	19	0.75(19)	1.6(41)	1/8x7(3x180)	4000	7.4(210)	13(330)	4.9(2.2)
ZNS-4111	13	–	–	0.051(1.3)	3000	1.68(48.1)	9.28(235.6)	1.06(0.48)

Warning: Facial and operation of pneumatic tools, must wear eye protection.
Recommended air pressure must equal or below @90psi (6.2 bar).

- Min. Hose Size: 3/8(10) inch(mm)
- Air Inlet Size: 1/4 inch-NPT/PT

Air Needle / Chisel Scalers

ZNS-1944NS
ZNS-1944NSL Locking Lever Type
ZNS-1944A Vacuum Type
Medium Duty Needle Scaler

Vacuum System

Locking Lever Type

Needle scalers can be fitted with dust shroud

ZKJ379F
ZKJ379FL Locking Lever Type
Medium Duty Chisel Scaler

ZKJ379K Scaler Kits

- 1 pc Needle Scaler
- 1 pc Moil Point Chisel
- 1 pc 20mm Flat Chisel
- 1 pc 35mm Bent Chisel
- 1 pc 1/4" Air Nipple
- 1 set Needle Attachment
- Net Weight 4 kg

ZKJ279NS
Medium Duty Pistol Grip Needle Scaler

ZKJ479NS
Medium Duty Pistol Grip Needle Scaler

ZNS361
Air Needle Scaler

ZKJ279F
Medium Duty Chisel Scaler

ZKJ479F
Medium Duty Chisel Scaler

Chisel Shank 3/8"(9.5mm)

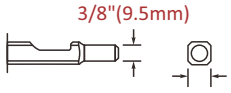

Model	Numbers of Needles pcs	Piston Diameter inch(mm)	Piston Stroke inch(mm)	Needle Diameter Øinch(mm)	Blows Per Min. bpm	Avg. Air Cons. cfm(l/min)	Overall Length inch(mm)	Net Weight lbs(kgs)
ZKJ279NS	19	1(25)	1.5(38)	1/8x7(3x180)	4600	8.2(232)	18.1(460)	7(3.2)
ZKJ279F	–	1(25)	1.5(38)	–	4800	8.2(232)	14.8(375)	5.3(2.4)
ZNS-1944NS	19	1(25)	1.5(38)	1/8x7(3x180)	4600	8.2(232)	18.1(460)	6.2(2.8)
ZNS-1944NSL	19	1(25)	1.5(38)	1/8x7(3x180)	4600	8.2(232)	18.1(460)	6.2(2.8)
ZNS-1944A	19	1(25)	1.5(38)	1/8x7(3x180)	4600	8.2(232)	18.1(460)	6.2(2.8)
ZKJ379F	–	1(25)	1.5(38)	–	4800	8.5(240)	15(380)	4.6(2.1)
ZKJ379FL	–	1(25)	1.5(38)	–	4800	8.5(240)	15(380)	4.6(2.1)
ZKJ479NS	19	1(25)	1.5(38)	1/8x7(3x180)	4600	8.6(243)	21.3(540)	7.3(3.3)
ZKJ479F	–	1(25)	1.5(38)	–	4800	8(227)	17.3(440)	5.5(2.5)
ZNS361	–	63/64(25)	1-11/32(34)	–	4000	14(392)	16-1/4(413)	5.7(2.6)

Warning: Facial and operation of pneumatic tools, must wear eye protection.
Recommended air pressure must equal or below @90psi (6.2 bar).

- Min. Hose Size: 3/8(10) inch(mm)
- Air Inlet Size: 1/4 inch-NPT/PT

Products and specifications subject to change without prior notice

Low Vibration Needle Scaler & Flux Chipper

Features

- Medium duty with vibration reduced design
- 19 x 3mm needles
- Dust shroud attachment available
- Requires no additional tools for changing needles/chisels
- Removal coatings, corrosion and accumulated materials
- Slag removal and stress-relieving welds
- Cleaning concrete, mixers, formwork & machinery

NEW PRODUCT

Low Vibration

ZNS-203VR
Medium duty low vibration
needle scaler - Pistol

ZFC-203VR
Medium duty low vibration
flux chipper - Pistol

ZNS-223VR
Medium duty low vibration
needle scaler - Straight

ZFC-223VR
Medium duty low vibration
flux chipper - Straight

Model	Numbers of Needles pcs	Piston Diameter inch(mm)	Piston Stroke inch(mm)	Needle Diameter Øinch(mm)	Blows Per Min. bpm	Avg. Air Cons. cfm(l/min)	Overall Length inch(mm)	Net Weight lbs(kgs)
ZNS-203VR	19	0.63(23.5)	0.43(11)	1/8x7(3x180)	2400	4(113)	13.38(340)	6(2.7)
ZFC-203VR	–	0.63(23.5)	0.43(11)	–	2400	4(113)	15.56(395)	7(3.2)
ZNS-223VR	19	0.63(23.5)	0.43(11)	1/8x7(3x180)	2400	4(113)	14.56(370)	5.2(2.35)
ZFC-223VR	–	0.63(23.5)	0.43(11)	–	2400	4(113)	17.13(435)	6.5(2.95)

Warning: Facial and operation of pneumatic tools, must wear eye protection.
Recommended air pressure must equal or below @90psi (6.2 bar).

- Min. Hose Size: 3/8(9.5) inch(mm)
- Air Inlet Size: 1/4 inch-NPT/PT

Heavy Duty Air Needle & Chisel Scalers

Features & Benefits

- Needle scaler designed to tackle a wide range of surface preparation tasks in construction, marine and petrochemical.
- Heaviest in the range of scalers.
- Heavy duty semi pistol grip.
- Adjustable front tube for longer needle life.
- The heavy duty scaler for the toughest applications such as roughing and dressing concrete and aggregate exposure, also ideal for removing the hardest scale and corrosion.
- Heavy rust and scale removal from steel structures such as bridges, ships and offshore platforms.
- Stippling of plain concrete for keying and decorative finishes.

ZKJ231-35 / ZKJ231-49
ZKJ231-66
ZKJ231A Vacuum Type
Heavy Duty Semi
Pistol Grip Needle Scaler

ZKJ231-3B-19
ZKJ231-3B-28
Heavy Duty Semi
Pistol Grip Needle Scaler

Vacuum System

120A025

Needle scalers can be fitted with dust shroud

ZKJ231B
Heavy Duty Chisel Scaler

Chisel Shank 0.591"(15mm)

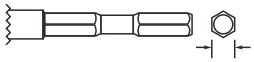

0.591"
(15mm)

Focus on the front exhaust, effectively blocking dust, Welding slag.

The control rod installation of safety devices, to increase the user security.

ZKJ383F
ZKJ383FL Safety lever
Heavy Duty Chisel Scaler

Chisel Shank 0.5"(12.7mm)

0.5"
(12.7mm)

ZKJ383NS
ZKJ383NSL Safety lever
Heavy Duty Needle Scaler

ZKJ381
Medium Duty Needle Scaler

Model	Numbers of Needles pcs	Piston Diameter inch(mm)	Piston Stroke inch(mm)	Needle Diameter Øinch(mm)	Blows Per Min. bpm	Avg. Air Cons. cfm(l/min)	Overall Length inch(mm)	Net Weight lbs(kgs)
ZKJ231-35	35	1.3(33)	2(52)	5/32x7(4x180)	2500	7.4(210)	18.1(460)	13.2(6)
ZKJ231-49	49	1.3(33)	2(52)	1/8x7(3x180)	2500	7.4(210)	18.1(460)	13.2(6)
ZKJ231-66	66	1.3(33)	2(52)	5/64x7(2x180)	2500	7.4(210)	18.1(460)	13.2(6)
ZKJ231-3B-19	19	1.1(28)	1.5(39)	5/32x7(4x180)	3000	6.2(176)	17.5(445)	10.4(4.7)
ZKJ231-3B-28	28	1.1(28)	1.5(39)	1/8x7(3x180)	3000	6.2(176)	17.5(445)	10.4(4.7)
ZKJ383NS	19	0.9(23)	1.06(27)	1/8x7(3x180)	3500	6.4(182)	16.9(430)	6.2(2.8)
ZKJ383NSL	19	0.9(23)	1.06(27)	1/8x7(3x180)	3500	6.4(182)	16.9(430)	6.2(2.8)
ZKJ231B	–	1.3(33)	2(52)	–	2000	7.4(210)	17.7(450)	11(5)
ZKJ383F	–	0.9(23)	1.06(27)	–	4000	6.4(182)	14.2(360)	4.2(1.9)
ZKJ383FL	–	0.9(23)	1.06(27)	–	4000	6.4(182)	14.2(360)	4.2(1.9)
ZKJ381	19	1(25)	1.3(33)	1/8x7(3x180)	4600	6(170)	16.5(420)	6(2.7)

Warning: Facial and operation of pneumatic tools, must wear eye protection.
Recommended air pressure must equal or below @90psi (6.2 bar).

- Min. Hose Size: 3/8(10) inch(mm)
- Air Inlet Size: 1/4 inch-NPT/PT

Products and specifications subject to change without prior notice

Hand Held Heavy Duty Air Scaling Hammers

Features & Benefits

- Lightweight, easy to handle.
- Detachable taper fit cutter head reduces cost of replacement and extends piston life.
- Bush hammer tungsten carbide tipped pistons.
- Alternative cruciform tungsten carbide tipped pistons.
- Removal of rust, coatings, scale from steel structures and surface.
- Cleaning of cast iron, steel pipe and bell joints of gas lines maintained by utilities and gas companies.
- Removal of stubborn coatings and mastic residue from floor.
- Reduced Vibration improves operators control.

ZKJ271
Triple Headed Scaling Hammer

ZKJ271L
Triple Headed Scaling Hammer (straight)

ZKJ311
Single Headed Scaling Hammer

ZKJ311T
Single Headed Scaling Hammer

Standard Side Handle
(fitted as standard)

Cruciform taper
tungsten cutterhead
(fitted as standard)

Single head cruciform piston
(fitted as standard)

Single head cruciform
tungsten piston
(Optional)

Model	Piston Diameter inch(mm)	Piston Stroke inch(mm)	Blows Per Min. bpm	Avg. Air Cons. cfm(l/min)	Overall Length inch(mm)	Net Weight lbs(kgs)	Min. Hose Size inch(mm)	Air Inlet Size inch-NPT/PT
ZKJ271	1.06(27)	1.024(26)	2400	7.8(223)	21.7(550)	8.8(4)	3/8(10)	3/8
ZKJ271L	1.06(27)	1.024(26)	2400	7.8(223)	20.5(520)	8.8(4)	3/8(10)	3/8
ZKJ311	1.18(30)	1.496(38)	7000	3.3(94)	22(560)	5.1(2.3)	3/8(10)	1/4
ZKJ311T	1.18(30)	1.496(38)	7000	3.3(94)	21.7(550)	5.3(2.4)	3/8(10)	3/8

Warning: Facial and operation of pneumatic tools, must wear eye protection.
Recommended air pressure must equal or below @90psi (6.2 bar).

Long Reach Air Scrapers

Features

- Quick change chisel release
- Unique, light weight version
- Air efficient & economical to use
- Available in 3L, 4L, 5L and 6L lengths
- Three tools in one: chipping, scraping, de-scaling

Applications

- Ice
- Floor tiles
- Residue
- Metal slag
- Adhesive
- Rubber coatings
- Asbestos
- Roofing materials
- Linoleum
- Chemical spillages
- Carpeting
- Bituminous

Corrosion removal for inaccessible area

One tool, multiple applications

ZKJ241K

Long Reach Scraper Kits

- 1 pc Long Reach Scraper
- 4 pcs Flat Chisel (40 / 50 / 70 / 100mm)
- 2 pcs Grip Tube 500mm
- 1 pc Grip Tube 300mm
- 1 pc Rubber Handle Grip
- 2 pcs Hex Wrench (6 / 2.5mm)
- 1 pc 1/4" Air Nipple
- Net Weight 11.5kg

ZKJ341K

Long Reach Scraper Kits

- 1 pc Long Reach Scraper
- 4 pcs Flat Chisel (40 / 50 / 70 / 100mm)
- 2 pcs Grip Tube 500mm
- 1 pc Grip Tube 300mm
- 1 pc Rubber Handle Grip
- 2 pcs Hex Wrench (6 / 2.5mm)
- 1 pc 1/4" Air Nipple
- Net Weight 6.2kg

2 tools in one

SCRAPING DESCALING

Products and specifications subject to change without prior notice

Long Reach Air Scrapers

Features & Benefits

- Light weight aluminium tools for flexible vertical and floor application.
- Low air consumption, will run from small 2HP compressor.
- Clean up of paint & chemical spillages.
- Rail track and infrastructure maintenance.
- Peeling Paint removal in hard to reach areas.
- Quickly clean large areas.
- Remove paint from checker plate using needle attachment.
- Removal of glue residues from carpet tiles.
- Use close to wall for finishing large areas.
- Ceramic & linoleum floor tile removal using chisel or scraper.
- "Pointing" tool for mortar removal.
- Weld seam cleaning.
- Plaster and render removal.

Chisel Shank 0.591"(15mm) Hex

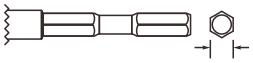

0.591"
(15mm)

ZKJ241-3L
Long Reach Scraper

ZKJ241NS
Long Reach Needle Scraper

ZKJ241-4L
Long Reach Scraper 47" (1200mm)

ZKJ2415NS
Long Reach Needle Scraper 47" (1200mm)

ZKJ241-5L
Long Reach Scraper 59" (1500mm)

ZKJ2416NS
Long Reach Needle Scraper 59" (1500mm)

ZKJ341-3L
Aluminium Long Reach Scraper

ZKJ341NS
Aluminium Long Reach Needle Scraper

ZKJ341-4L
Aluminium Long Reach Scraper 47" (1200mm)

ZKJ3415NS
Aluminium Long Reach Needle Scraper 47" (1200mm)

ZKJ341-5L
Aluminium Long Reach Scraper 59" (1500mm)

ZKJ3416NS
Aluminium Long Reach Needle Scraper 59" (1500mm)

Model	Numbers of Needles pcs	Piston Diameter inch(mm)	Piston Stroke inch(mm)	Needle Diameter Øinch(mm)	Blows Per Min. bpm	Avg. Air Cons. cfm(l/min)	Net Weight lbs(kgs)
ZKJ241-3L	–	1.12(28.5)	1.5(38)	1/8x7(3x180)	2400	2.8(80)	10.6(4.8)
ZKJ241NS	28	1.12(28.5)	1.5(38)	1/8x7(3x180)	2400	2.8(80)	10.6(4.8)
ZKJ241-4L	–	1.12(28.5)	1.5(38)	1/8x7(3x180)	2400	3.2(90)	14.3(6.5)
ZKJ2415NS	28	1.12(28.5)	1.5(38)	1/8x7(3x180)	2400	3.2(90)	14.3(6.5)
ZKJ241-5L	–	1.12(28.5)	1.5(38)	1/8x7(3x180)	2400	4(114)	16.1(7.3)
ZKJ2416NS	28	1.12(28.5)	1.5(38)	1/8x7(3x180)	2400	4(114)	16.1(7.3)
ZKJ341-3L	–	1.12(28.5)	1.5(38)	1/8x7(3x180)	2400	2.8(80)	8.2(3.7)
ZKJ341NS	28	1.12(28.5)	1.5(38)	1/8x7(3x180)	2400	2.8(80)	8.2(3.7)
ZKJ341-4L	–	1.12(28.5)	1.5(38)	1/8x7(3x180)	2400	3.2(90)	10.1(4.6)
ZKJ3415NS	28	1.12(28.5)	1.5(38)	1/8x7(3x180)	2400	3.2(90)	10.1(4.6)
ZKJ341-5L	–	1.12(28.5)	1.5(38)	1/8x7(3x180)	2400	4(114)	10.8(4.9)
ZKJ3416NS	28	1.12(28.5)	1.5(38)	1/8x7(3x180)	2400	4(114)	10.8(4.9)

Warning: Facial and operation of pneumatic tools, must wear eye protection.
Recommended air pressure must equal or below @90psi (6.2 bar).

- Min. Hose Size: 3/8(10) inch(mm)
- Air Inlet Size: 1/4 inch-NPT/PT

Dimensions and Accessories

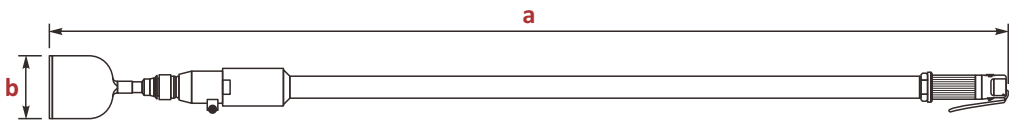

Dimensions

Long Reach Scrapers			Long Reach Needle Scaler		
Model	a inch(mm)	b inch(mm)	Model	a inch(mm)	b inch(mm)
ZKJ241-3L	23.6(600)	3.93(100)	ZKJ241NS	24(610)	3.93(100)
ZKJ241-4L	47.2(1200)	3.93(100)	ZKJ2415NS	47.2(1200)	3.93(100)
ZKJ241-5L	59(1500)	3.93(100)	ZKJ2416NS	59(1500)	3.93(100)
ZKJ341-3L	23.6(600)	3.93(100)	ZKJ341NS	24(610)	3.93(100)
ZKJ341-4L	47.2(1200)	3.93(100)	ZKJ3415NS	47.2(1200)	3.93(100)
ZKJ341-5L	59(1500)	3.93(100)	ZKJ3416NS	59(1500)	3.93(100)

Optional Accessories

Needle Type

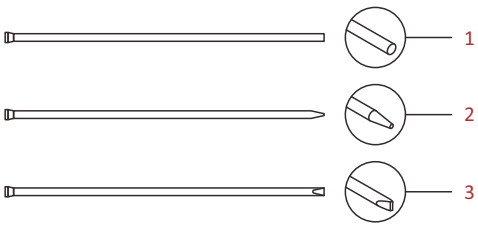

Needle attachment

- Needle holder for 28 needles Ø3mm (1/8")
- Needle holder for 19 needles Ø4mm (5/32")

Needle Type	Length inch(mm)	O.D inch(mm)
1	7(180)	5/64(2)
1	5.9(150)	5/64(2)
1	4.9(125)	1/8(3)
1	7(180)	1/8(3)
1	7(180)	5/64(2)
2	7(180)	1/8(3)
3	7(180)	1/8(3)
3	7(180)	5/64(2)

Chisel Shank 0.59" (15mm) Hex

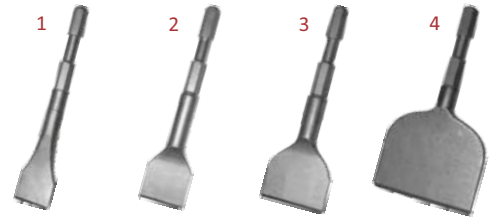

Chisel Shank 0.37" (9.5mm)

Chisel Shank 0.5" (12.7mm)

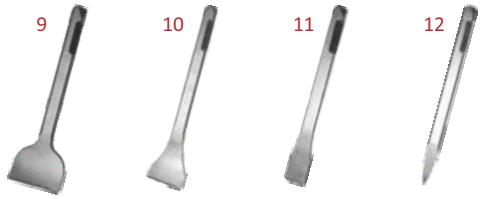

Item: 1-4

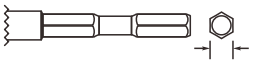

Item: 5-8

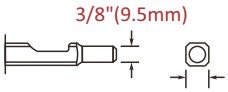

Item: 9-12

Item	Model	Length inch(mm)	Length inch(mm)	Width inch(mm)
1	ZST-13040	1-1/2" Flat Chisel	8.7(220)	1.57(40)
2	ZST-13050	1-1/3" Flat Chisel	8.7(220)	1.96(50)
3	ZST-13070	2-3/4" Flat Chisel	8.7(220)	2.75(70)
4	ZST-130100	4" Flat Chisel	8.7(220)	3.93(100)
5	ZST-26850	2" Flat Chisel	7(175)	1.96(50)
6	ZST-26835	1-1/3" Flat Chisel	7(175)	1.37(35)
7	ZST-26820	3/4" Flat Chisel	7(175)	0.78(20)
8	ZST-26801	Moil Point Chisel	7(175)	–
9	ZST-27050	2" Flat Chisel	7(175)	1.96(50)
10	ZST-27035	1-1/3" Flat Chisel	7(175)	1.37(35)
11	ZST-27020	3/4" Flat Chisel	7(175)	0.78(20)
12	ZST-27001	Moil Point Chisel	7(175)	–

Products and specifications subject to change without prior notice

Air Rammer

ZSR-412
Air Rammer

ZSR-302
Air Rammer

ZSR-303
Air Rammer

ZSR-302L
Air Rammer

ZSR-303L
Air Rammer

ZSR-304L
Air Rammer

Model	Piston Diameter mm	Stroke Length mm	Free Speed bpm	Overall Length inch(mm)	Avg. Air Cons. cfm(m^3/min)	Net Weight lbs(kgs)	Min. Hose Size inch(mm)	Air Inlet Size inch-NPT/PT
ZSR-412	18	50	1500	280~360	14(0.4)	3.53(1.6)	3/8(10)	1/4
ZSR-302	22	65	1000	380~470	17(0.5)	6.5(2.95)	3/8(10)	3/8
ZSR-302L	22	65	1000	870~980	17(0.5)	8.27(3.75)	3/8(10)	3/8
ZSR-303	25.4	100	800	500~660	24(0.7)	13.23(6)	3/8(10)	3/8
ZSR-303L	25.4	100	800	1060~1210	24(0.7)	17.64(8)	1/2(12.7)	1/2
ZSR-304L	32	125	700	1080~1250	30(0.85)	21.58(9.79)	1/2(12.7)	1/2

Air Chipping Hammer

ZCH280G-F
Air Chipping Hammer

ZP281GF
Air Chipping Hammer

ZP283GF
Air Chipping Hammer

ZCH280AG-F
Air Chipping Hammer

ZP282GF
Air Chipping Hammer

ZP284GF
Air Chipping Hammer

ZND5002
Air Chipping Hammer

ZND5004
Air Chipping Hammer

ZND5003
Air Chipping Hammer

ZND5005
Air Chipping Hammer

ZP363L
Air Chipping Hammer

Model	Chisel Shank Round inch(mm)	Chisel Shank Hex inch(mm)	Piston Diameter mm	Piston Stroke Length inch(mm)	Blows Per Minute bpm	Avg. Air Cons. cfm	Overall Length inch(mm)	Net Weight lbs(kgs)	Min. Hose Size inch(mm)	Air Inlet Size inch-NPT/PT	Power (Joule)
ZCH280G-F	0.55(14)	0.47(12)	20	1-3/4(45)	3000	14	9-9/16(243)	5.7(2.6)	3/8(10)	1/4	9.51
ZCH280AG-F	0.55(14)	0.47(12)	20	1-3/4(45)	3000	14	9-9/16(243)	5.7(2.6)	3/8(10)	1/4	9.51
ZP281GF	0.68(17.3)	0.58(14.7)	28.5	1(25.4)	2820	21	12-1/8(308)	12.1(5.5)	1/2(12.7)	3/8	19.74
ZP282GF	0.68(17.3)	0.58(14.7)	28.5	2(50)	2150	21	12-7/8(327)	13(5.9)	1/2(12.7)	3/8	27.3
ZP283GF	0.68(17.3)	0.58(14.7)	28.5	3(76)	1900	24	14-7/8(378)	14.3(6.5)	1/2(12.7)	3/8	28.01
ZP284GF	0.68(17.3)	0.58(14.7)	28.5	4(102)	1500	28	16-1/8(410)	15.4(7)	1/2(12.7)	3/8	30.41
ZND5002	0.68(17.3)	0.58(14.7)	27.9	1.81(46)	2940	17	14-1/2(390)	11.9(5.4)	1/2(12.7)	3/8	13.12
ZND5003	0.68(17.3)	0.58(14.7)	28.5	3.03(77)	2200	34	14(365)	17.7(8.04)	1/2(12.7)	3/8	22.9
ZND5004	0.68(17.3)	0.58(14.7)	28.5	3.7(94)	1900	33	15-1/4(400)	18.7(8.5)	1/2(12.7)	3/8	28
ZND5005	0.68(17.3)	0.58(14.7)	28.5	4.02(102)	1500	30	16-1/2(425)	19.6(8.88)	1/2(12.7)	3/8	30.46
ZP363L	0.68(17.3)	0.58(14.7)	28.5	3.7(94)	2280	33	35-3/8(900)	20.2(9.16)	1/2(12.7)	1/2	28

Products and specifications subject to change without prior notice

Shock Reduced Air Chipping Hammer

Features

- Newly Patented Shock Reduced Mechanism.
- Gravity cast Aluminum Alloy 4 bolts handle withstands rugged use.
- Spline locking device prevents loosening of Handle & Cylinder. Grooved barrel for use with retainers.
- Alloy steel made Cylinder & Piston heat-treated for durability.
- Choice of Bushing- round bushing for chisel freely rotating or hexagonal Bushing for use with hexagonal Chisels.

Extreme Low Vibration

NEW PRODUCT

ZCH-2SRTI
Shock Reduced
Air Chipping Hammer

ZCH-3SRTI
Shock Reduced
Air Chipping Hammer

ZCH-4SRTI
Shock Reduced
Air Chipping Hammer

ZCH-2SRTO
Shock Reduced
Air Chipping Hammer

ZCH-3SRTO
Shock Reduced
Air Chipping Hammer

ZCH-4SRTO
Shock Reduced
Air Chipping Hammer

Opt. Retainer type

281703

281701

Application:

The New ZCH series heavy duty Chipping Hammers are designed for rugged use in foundries, shipyards, refineries, fabrication shops and construction applications.

Available in 2" thru 4" stroke versions to offer the power levels necessary for a variety of use from light to medium chipping and trimming through heavy cutting.

Model	Chisel Shank Round inch(mm)	Chisel Shank Hex inch(mm)	Piston Diameter mm	Piston Stroke Length inch(mm)	Blows Per Minute bpm	Avg. Air Cons. cfm(m^3/min)	Vibration m/s^2	Net Weight lbs(kgs)	Min. Hose Size inch(mm)	Air Inlet Size inch-NPT/PT	Power (Joule)
ZCH-2SRTI	0.68(17.3)	0.58(14.7)	28.5	2(50)	2150	30(0.85)	5	19.2(8.71)	1/2(12.7)	3/8	22.9
ZCH-2SRTO	0.68(17.3)	0.58(14.7)	28.5	2(50)	2150	30(0.85)	5	19.55(8.87)	1/2(12.7)	3/8	22.9
ZCH-3SRTI	0.68(17.3)	0.58(14.7)	28.5	3(76)	1900	32(0.9)	5	21.03(9.54)	1/2(12.7)	3/8	28
ZCH-3SRTO	0.68(17.3)	0.58(14.7)	28.5	3(76)	1900	32(0.9)	5	20.97(9.51)	1/2(12.7)	3/8	28
ZCH-4SRTI	0.68(17.3)	0.58(14.7)	28.5	4(102)	1500	33(0.95)	7	21.05(9.55)	1/2(12.7)	3/8	30.46
ZCH-4SRTO	0.68(17.3)	0.58(14.7)	28.5	4(102)	1500	33(0.95)	7	21.76(9.87)	1/2(12.7)	3/8	30.46

Features & Benefits

- Simple structure for less maintenance.
- Powerful hitting power and low reacting.
- Use for destroy the concretes, asphalt path, building and infrastructure.
- Medium size service/general demolition breaker.
- Long stroke cylinder provides maximum impact energy, giving a harder impact than similarly sized standard breakers.
- The best choice for applications in medium hard materials and where you need lower weight or low air consumption.

Reinforced cup retainer.

Unique Nut
for (ZKJ21S, ZKJ41S)

Hose Nipple
1/2", 1/4"

Hitch Cutter
Retainer

Beehive Retainer
Spring

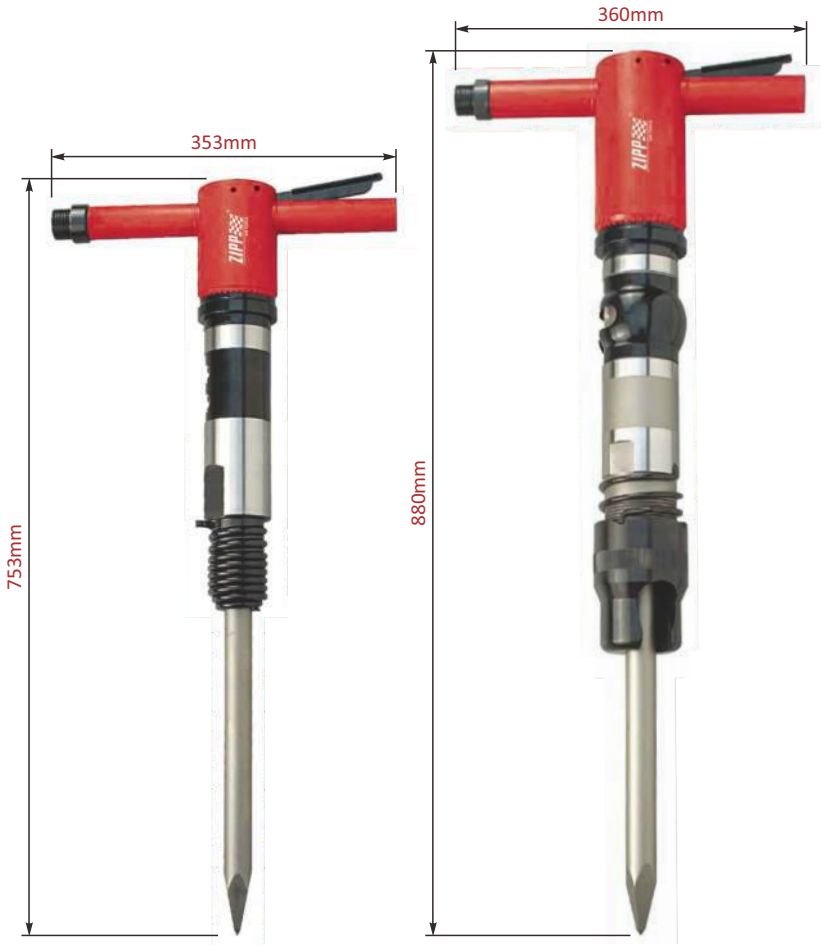

ZKJ21S
Concrete Breaker

ZKJ41S
Concrete Breaker

Item	Model	Description	Length inch(mm)	Width inch(mm)
1	ZST-10S01R	Tapered Punch	17.7(450)	–
2	ZST-30S01R	Tapered Punch	17.7(450)	–
3	ZST-30S45R	Flat Chisel	17.7(450)	1.8(45)

Model	Shank Size inch(mm)	Piston Diameter inch(mm)	Piston Stroke Length inch(mm)	Blows Per Minute bpm	Avg. Air Cons. cfm(l/min)	Overall Length inch(mm)	Net Weight lbs(kgs)	Hose Int. Ø inch(mm)
ZKJ21S	1.02(26)	1.38(35)	5.9(150)	1300	35(990)	28.9(753)	31.1(14.1)	12.7(1/2)
ZKJ41S	1.18(30)	1.57(40)	9.2(235)	1000	42(1189)	34.6(880)	54.2(24.6)	19(3/4)

Warning: Facial and operation of pneumatic tools, must wear eye protection.
Recommended air pressure must equal or below @90psi (6.2 bar).

Products and specifications subject to change without prior notice

Chipping Hammer / Clay Digger

Features

ZCH 2, 3, and 4" stroke chipper has a durable 4 bolt D handle and inside trigger for chipping concrete in parking garages, highway pillars and light demolition and building restoration.

- Machined from premium alloy steel
- Forged G handle
- Cast D handle with inside rubberized trigger
- High shock tool steel piston
- Rotatable exhaust deflector
- Inlet 3/8" with bushing, 7/8" with out bushing
- Available with .680 Round Chuck Model
- ZCH 2,3, or 4, R
- Available with .580 Hex Chuck
- ZCH 2,3,or 4, H
- Standard with oval collar retainer
- Optional Universal BALL retainer available
- Optional whip hose with oiler available

ZCH-02C(H)
ZCH-03C(H) / ZCH-04C(H)
"C" Type

ZCH-02D(H)
ZCH-03D(H) / ZCH-04D(H)
"D" Type Outer Trigger

ZCH-02DI(H)
ZCH-03DI(H) / ZCH-04DI(H)
"D" Type Inner Trigger

Model	Chuck Size inch(mm)	Bore inch(mm)	Stroke inch(mm)	Blows Per Minute bpm	Avg. Air Cons. cfm(m^3/min)	Overall Length inch(mm)	Net Weight lbs(kgs)	Air Inlet Size inch-NPT/PT
ZCH-02C(H)	0.58(14.8) Hex, 0.68(17.5) Rnd	1.125(29)	2(51)	2300	29.75(0.84)	14(356)	13(6)	3/8(10)
ZCH-02D(H)	0.58(14.8) Hex, 0.68(17.5) Rnd	1.125(29)	2(51)	2300	29.75(0.84)	14(356)	13(6)	3/8(10)
ZCH-02DI(H)	0.58(14.8) Hex, 0.68(17.5) Rnd	1.125(29)	2(51)	2300	29.75(0.84)	14(356)	13(6)	3/8(10)
ZCH-03C(H)	0.58(14.8) Hex, 0.68(17.5) Rnd	1.125(29)	3(75)	2200	31.5(0.89)	15.3(387)	14(6.4)	3/8(10)
ZCH-03D(H)	0.58(14.8) Hex, 0.68(17.5) Rnd	1.125(29)	3(75)	2200	31.5(0.89)	15.3(387)	14(6.4)	3/8(10)
ZCH-03DI(H)	0.58(14.8) Hex, 0.68(17.5) Rnd	1.125(29)	3(75)	2200	31.5(0.89)	15.3(387)	14(6.4)	3/8(10)
ZCH-04C(H)	0.58(14.8) Hex, 0.68(17.5) Rnd	1.125(29)	4(102)	1800	33.23(0.94)	17(432)	15(7)	3/8(10)
ZCH-04D(H)	0.58(14.8) Hex, 0.68(17.5) Rnd	1.125(29)	4(102)	1800	33.23(0.94)	17(432)	15(7)	3/8(10)
ZCH-04DI(H)	0.58(14.8) Hex, 0.68(17.5) Rnd	1.125(29)	4(102)	1800	33.23(0.94)	17(432)	15(7)	3/8(10)

Features

Designed for light demolition jobs, hardpan and digging clay. Can be used horizontally with D handle and internal trigger.

- Forged alloy construction with one piece cylinder
- 4 bolt back head
- Internal oiler
- Removable front head with latch
- Replaceable check bushing
- Optional muffler

ZCD-30
Clay Digger

DO NOT apply air pressure over 100 psi / 7 bar to these tools.

Model	Chuck Size inch(mm)	Bore inch(mm)	Stroke inch(mm)	Blows Per Minute bpm	Avg. Air Cons. cfm(m^3/min)	Overall Length inch(mm)	Net Weight lbs(kgs)	Air Inlet Size inch-NPT/PT
ZCD-30	1 x 4-1/4(25 x 108) 7/8 x 3-1/4(22 x 83)	1.75(44)	3.375(86)	1550	49(1.4)	23(584)	30(14)	3/8(10)

Features

Designed for light concrete demolition, all angles or confined spaces. D handle with external thumb trigger

- Rotatable exhaust muffler
- One piece machined premium alloy cylinder
- Safe bridged or stepped internal cylinder (piston will not exit bottom of tool)
- Utilizes 11X jumbo steels
- Spring held retainer
- Standard upper and lower hardened sleeves
- Urethane bumper for longer life
- Requires whip hose and oiler

ZRB-6
Rivet Buster

Features

Designed for light concrete demolition, all angles or confined spaces. D handle with external thumb trigger

- ZRB-8 designed for medium & ZRB-11 designed for heavy concrete demolition or cutting rivet heads. D handle with internal variable speed trigger.
- Rotatable rubber exhaust muffler or optional rotatable steel clip exhaust
- One piece machined premium alloy cylinder
- Safe bridged or stepped internal cylinder (piston will not exit bottom of the tool)
- Standard upper & lower hardened sleeves
- Replaceable auto valve for extended life
- Utilizes 11X jumbo steels
- Spring retainer
- Urethane bumper for longer life
- Screened 1/2" NPT inlet
- Requires whip hose and oiler

Optional Steel clip Exhaust

ZRB-8 / ZRB-11
Rivet Buster

DO NOT apply air pressure over 100 psi / 7 bar to these tools.

Model	Chuck Size inch(mm)	Bore inch(mm)	Stroke inch(mm)	Blows Per Minute bpm	Avg. Air Cons. cfm(m^3/min)	Overall Length inch(mm)	Net Weight lbs(kgs)	Air Inlet Size inch-NPT/PT
ZRB-6	11 x JUMBO	1.418(36)	2.75(70)	1560	40(1.2)	17(432)	23(10.5)	3/4(19), 7/8(22.2)
ZRB-8	11 x JUMBO	1.188(30)	8(203)	1140	44(1.3)	22(572)	30(14)	1/2(12)
ZRB-11	11 x JUMBO	1.188(30)	11(279)	850	50(1.41)	25-1/2(648)	33(15)	1/2(12)

Products and specifications subject to change without prior notice

MADE IN USA

Hammer Drill / Light Weight Rock Drill / Rock Drill

ZRD-9
Hammer Drill

Features

Designed for a wide variety of construction and maintenance applications such as driving or setting masonry anchors and drilling holes in concrete, bricks or rock. As a hammer, these tools can be used for chipping, scarifying, scaling and cleaning welds.

- Excellent power-to-weight ratio helps drill holes faster and easier than comparable electric rotary hammers
- Built-in oiler provides continuous lubrication
- Teasing throttle for precise control
- Rotation release button converts tool to a hammer
- Cushioned piston for smooth operation and long life
- With an adaptor, can be used with electric hammer drill bits
- Round spline version available

ZRD-20
Light Weight Rock Drill

Features

Designed for anchoring, shallow holes. D type handle allow horizontal drilling & collaring holes.

- D type handle with thumb trigger
- Forged alloy construction
- Built-in oiler
- Replaceable chuck, 7/8" x 3-1/4" Hex.

ZRD-30
Rock Drill

Features

Designed for light construction or soft rock drill with high speed & excellent flushing ability.

- Forged alloy construction
- Requires constant feed inline oiler
- Replaceable chuck, 7/8" x 4-1/4" or 7/8" x 3-1/4"
- Single throttle with three drilling speed: Stop, Blow, 1, 2, 3. 1 or slow is for collaring holes and remove drill from drilling hole.
- Optional wet kit available
- rpm: 240
- Water Consumption: 4.8 l/min

ZRD-50
Rock Drill

Features

Designed for medium to heavy duty construction drill suit for drilling medium rocks.

- Forged alloy construction
- Requires constant feed inline oiler
- Replaceable chuck, 1" x 4-1/4" or 7/8" x 4-1/4" or 7/8" x 3-1/4"
- Adjustable drilling speed
- Optional muffler & wet kit available
- rpm: 180
- Water Consumption: 6.7 l/min
- Performance in Granite at 85-90psi(6-7bar): 24.4"/m(62 cm/m)

ZRD-75
Rock Drill

Features

Designed for heavy duty Quarry drill suit for drill granite.

- Forged alloy construction
- Internal oiler
- Replaceable chuck, 1" x 4-1/4" or 7/8" x 4-1/4"
- Three drilling speed: Stop, Blow, 1, 2, 3. 1 or slow is for collaring holes and remove drill from drilling hole.
- Optional wet kit available
- Optional muffler
- Optional constant feed inline oiler (6' 3/4" whip)
- rpm: 200

Model	Chuck Size inch(mm)	Bore inch(mm)	Stroke inch(mm)	Blows Per Minute bpm	Avg. Air Cons. cfm(m^3/min)	Overall Length inch(mm)	Net Weight lbs(kgs)	Air Inlet Size inch-NPT/PT
ZRD-9	3/4 Hex. Round spline shank	1-1/4(32)	1(25.4)	3400	20(0.9)	15(375)	9(4)	3/8(10)
ZRD-20	7/8 x 3-1/4(22 x 83)	1.94(49.18)	1.89(48)	2900	36(1.2)	19(483)	16.5(7.5)	3/8(10)
ZRD-30	7/8 x 4-1/4(22 x 108) 7/8 x 3-1/4(22 x 83)	2.44(62)	1.44(37)	2700	73(2.1)	19.5(495)	29(13)	3/4(19)
ZRD-50	1 x 4-1/4(25 x 108) 7/8 x 4-1/4(22 x 108) 7/8 x 3-1/4(22 x 83)	3(76)	2(51)	2300	92.2(2.6)	20.5(521)	51(23)	3/4(19)
ZRD-75	1 x 4-1/4(25 x 108) 7/8 x 4-1/4(22 x 108) 7/8 x 3-1/4(22 x 83)	2.63(67)	3.22(82)	2250	98(2.77)	23.75(603)	61(27.5)	3/4(19)

Features

Designed for light demolition works. 2" to 4" concrete sidewalks, pavement and breaking asphalt.

- One piece cylinder & 4 bolt back head
- Forged alloy construction
- Replaceable chuck bushing
- Removable front head
- Internal oiler
- Optional muffler

ZPB-30
Pavement Breaker

Features

Designed for light or medium demolition works. 2" to 4" plus hard concrete, bridge deck resurfacing and asphalt.

- 4 bolt back head
- Forged alloy construction
- Replaceable chuck bushing
- Removable front head (bolt on)
- Tool requires inline oiler
- Optional muffler

ZPB-40
Pavement Breaker

Features

Designed for medium demolition works on rocks and 3" to 4" thick concrete pavement and asphalt.

- 4 bolt back head
- Forged alloy construction
- Heavy duty side rod
- bolts and springs
- Replaceable chuck bushing
- Removable front head
- Internal oiler
- Optional muffler

ZPB-60
Pavement Breaker

Features

Designed for heavy demolition works, rocks, reinforced concrete and 5" to 6" plus thick concrete and pavement.

- 4 bolt back head
- Forged alloy construction
- Heavy duty side rod bolts and springs
- Replaceable chuck bushing
- Removable front head
- Internal oiler
- Optional muffler

ZPB-90
Pavement Breaker

DO NOT apply air pressure over 100 psi / 7 bar to these tools.

Model	Chuck Size inch(mm)	Bore inch(mm)	Stroke inch(mm)	Blows Per Minute bpm	Avg. Air Cons. cfm(m^3/min)	Overall Length inch(mm)	Net Weight lbs(kgs)	Air Inlet Size inch-NPT/PT
ZPB-30	1 x 4-1/4(25 x 108) 7/8 x 3-1/4(22 x 83)	1.75(44)	3.375(86)	1550	49(1.4)	22.5(572)	34(15)	3/8(10)
ZPB-40	1 x 4-1/4(25 x 108)	1.69(43)	2.75(70)	1800	49(1.4)	31(777)	39(18)	3/8(10)
ZPB-60	1-1/4 x 6(32 x 154) 1-1/8 x 6(28 x 154)	2.25(57)	4.1(104)	1400	59(1.7)	25.63(651)	67(30)	3/4(19)
ZPB-90	1-1/4 x 6(32 x 154) 1-1/8 x 6(28 x 154)	2.625(67)	6.06(154)	1250	75(2.1)	28.75(730)	92.5(42)	3/4(19)

Products and specifications subject to change without prior notice

Backfill Tamper / Trench Digger

ZBT-6
Back Fill Tamper

Features

This temper is designed for soil compaction, temporary filling of holes or asphalt packing. Applications range from foundation and pavement repair to the installation of power or telephone poles. Comes with standard 6" cast iron butt.

- Side handle throttle
- Precision ground alloy cylinder
- Requires whip hose (oiler optional)
- Optional butts - Pole of half moon butt / 6" Aluminum butt

DO NOT apply air pressure over 100 psi / 7 bar to these tools.

Model	Bore inch(mm)	Stroke inch(mm)	Blows Per Minute bpm	Avg. Air Cons. cfm(m^3/min)	Taper	Overall Length inch(mm)	Net Weight lbs(kgs)	Air Inlet Size inch-NPT/PT
ZBT-6	1.5(38)	5.5(140)	800	38.5(1.1)	804	48.25(1226)	40(18)	1/2(13)

ZTD-19
Trench Digger

Features

Designed with long reach handle for digging in trenches & foundations. Used for clay, hardpan or frozen ground.

- 4 bolt back head & one piece cylinder
- Forged alloy long handle
- Removable front head
- Replaceable chuck bushing
- Internal oiler
- Optional muffler

DO NOT apply air pressure over 100 psi / 7 bar to these tools.

Model	Chuck Size inch(mm)	Bore inch(mm)	Stroke inch(mm)	Blows Per Minute bpm	Avg. Air Cons. cfm(m^3/min)	Overall Length inch(mm)	Net Weight lbs(kgs)	Air Inlet Size inch-NPT/PT
ZTD-19	1 x 4-1/4(25 x 108) 7/8 x 3-1/4(22 x 83)	1.69(43)	2.75(70)	1800	49(1.4)	31(777)	39(18)	3/8(10)

Storm Cleaning Gun / Foam Gun

Features

- Patented water atomization mechanism.
- Patented 2 in 1 cap for use with regulator bottle or PET bottles.
- Easiest and fastest wet or dry cleaning tool for automotive interiors, engine bay, carpets, floor mats, etc.

The Handheld high-intensity rotating air flow dust blow gun. It is different from the commercially available blow gun. It is designed with a special hose and uses high-pressure air to generate high-speed rotation and then develop high-intensity rotating air flow which can clean dust / foreign matter / dewatering.

Storm Cleaning Gun / Foam Gun

ZBG-1211
Palm-shaped blow gun

ZTG-1211 Plastic tube
ZTG-1211S Stainless tube
Storm Cleaning Gun

ZTG3125 Ball type
Storm cleaning gun
with brush

ZTG3125BS Ball type
Storm cleaning gun
& suction kit (large cover)

ZTG3125BSS Ball type
Storm cleaning gun
& suction kit (small cover)

ZTG1311A Tube type
Storm cleaning gun
with brush

ZTG1311BS Tube type
Storm cleaning gun
& suction kit (large cover)

ZTG1311BSS Tube type
Storm cleaning gun
& suction kit (small cover)

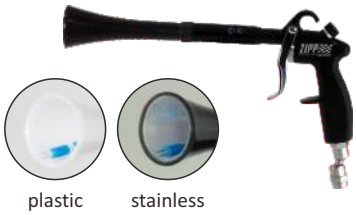

ZTG-1211N Plastic tube
ZTG-1211SN Stainless tube
Storm Cleaning Gun

ZCCWT-1311BS
Large cover suction kit

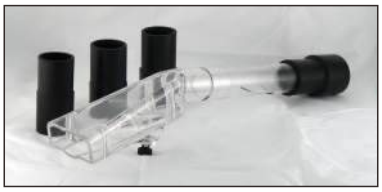

ZCTB-3125BSS
Small cover suction kit

ZFG1411
Foam Gun

Model	Free Speed rpm	CUP	L*W*H mm	Avg. Air Cons. cfm	Net Weight lbs(kgs)	Operating Air Pressure psi	Air Inlet Size inch-NPT/PT	
ZBG-1211	6000	–	156*104	2.8(80)	0.38(0.171)	90	1/4	
ZTG3125	8000	1L	330*120*240	9(255)	1.54(0.7)	90	1/4	can't sell to USA
ZTG3125BS	8000	1L	360*120*275	9(255)	2.65(1.2)	90	1/4	can't sell to USA
ZTG3125BSS	8000	1L	360*120*275	9(255)	2.4(1.1)	90	1/4	can't sell to USA
ZTG1311A	8000	1L	330*120*240	9(255)	1.54(0.7)	90	1/4	can't sell to USA
ZTG1311BS	8000	1L	360*120*275	9(255)	2.65(1.2)	90	1/4	can't sell to USA
ZTG1311BSS	8000	1L	360*120*275	9(255)	2.4(1.1)	90	1/4	can't sell to USA
ZTG1211	3000	1L	305*120*240	6(170)	1.35(0.61)	90	1/4	
ZTG1211S	3000	1L	305*120*240	6(170)	1.35(0.61)	90	1/4	
ZTG1211N	–	–	305*43*160	6(170)	0.88(0.4)	90	1/4	
ZTG1211SN	–	–	305*43*160	6(170)	0.88(0.4)	90	1/4	
ZFG1411	–	1L	295*120*260	13(368)	1.76(0.8)	90	1/4	

Brushless BOBTAIL®/ NEOBOLT® Tool

Features

- Riveting tools developed and designed specifically for solar panel Installation.
- The nozzle and claw are CNC processed by special alloy steel material to reduce the frequency of replacement of worn parts.
- Built-in brushless motor system, durable and stable working performance.
- Transmission mechanism adopts screw mechanism to meet the requirements of large pulling force operation.
- The internal parts of the whole machine achieve integrated design scheme, excellent production, safe and reliable.
- The starting switch is non-contact induction switch, which greatly improves the working life of the switch.
- The charger and battery meet the CE safety standard, fireproof and explosion-proof, using temperature control protection, can realize 1 hour fast charging.

Can be switched between tension mode or stroke mode

1/4" P/N: 1026BOB08 - BOBTAIL NOSE ASS'Y for ZCR1026 cordless tool

For Groove Tail Lock Bolt	

1/4" P/N: 1026NB08 - NEOBOLT NOSE ASS'Y for ZCR1026 cordless tool

For Short Tail Lock Bolt	

LED illuminated working area

More power can realize one-hour fast charging

ZCR1026BL

Brushless BOBTAIL®/ NEOBOLT® Tool

Model	Traction Power lbf(kgf)	Stroke Length inch(mm)	Battery (Charging Time)	Charger	Net Weight (without Battery) lbs(kgs)	Rivet Range
ZCR1026BL	2248(1020)	1(26)	18V 2.0Ah (Approx. 60mins)	AC100V~240V	4.41(2)	M6(Aluminum)

BOBTAIL® IS A REGISTERED TRADEMARK OF HOWMET AEROSPACE. NEOBOLT® IS A REGISTERED TRADEMARK OF AVDEL UK LIMITED.

Products and specifications subject to change without prior notice

Cordless Brushless Rivet Tool

Features

- Special Anti-off Nozzle design to avoid rivets failing down.
- Automatic Pin Removal, (no need to tilt the tool) and make shortest processing time.
- A larger riveting stroke (28mm), capable of riveting 6.4x22mm blind rivets.
- If specially riveting 6.4mm structural rivets such as hemlok, monobolt, megna-lok, or 6.4mm stainless steel rivets should be matched with 18V / 4.0Ah Battery.

Accessories

- ZCR2028BL Handle
- Battery*2
- Charger
- 5 Nosepieces (3.2/ 4.0/ 5.0/ 6.0/ 6.4 mm)
- Special Wrench
- Instructions
- One Big Mandrel Collector and One Small Mandrel Collector
- High Quality Tool Box

ZCR2028BL
Cordless Brushless Rivet Tool

Product Details

KD18BS
Match 18V
Bosch Battery

KD18MT
Match 18V
Makita Battery

KD18MW
Match 18V
Milwaukee Battery

Optional Battery Adapters

Anti-off Nozzle and
Automatic Pin Collecting Design

3.2 mm:
Approx.1300 PCS/ Battery Charge
4.0 mm:
Approx.1150 PCS/ Battery Charge
5.0 mm:
Approx.1000 PCS/ Battery Charge
6.0 mm:
Approx.900 PCS/ Battery Charge
6.4 mm:
Approx.800 PCS/ Battery Charge

Riveting Datas(Steel Blind Rivets)

Model	Traction Power lbf(kgf)	Stroke Length inch(mm)	Battery (Charging Time)	Charger	Net Weight (without Battery) lbs(kgs)	Nozzle Spec
ZCR2028BL	4496(2040)	1-7/64(28)	18V 2.0Ah (Approx. 55mins)	AC100V~240V	4(1.82)	3.2, 4.0, 5.0, 6.0, 6.4mm

Cordless Rivet Tool

Features

- Brushless Motor for longer service life.
- 30kN high pull force & long stroke length for Ultimate versity.
- 18V/4.0Ah DC Lithium battery system, DC BL motor.
- Install Huck Magna Grip, C6L Lockbolt, hemlok, monobolt and megna-lok.

Accessories

- ZT3031BL Tool
  (exclude any nose assemblies)
- Battery*2
- Charger
- Special Wrench
- Blow Mold Case

ZT3031BL
Cordless Rivet Tool

Product Details

KD18BS
Match 18V
Bosch Battery

KD18MT
Match 18V
Makita Battery

KD18MW
Match 18V
Milwaukee Battery

Optional Battery Adapters

Nose Assemblies

Riveting Datas(Steel Rivets)

Huck Magna Grip 4.8mm (3/16''):
Approx.1200 PCS/ Battery Charge
Huck Magna Grip 6.4mm (1/4''):
Approx.700 PCS/ Battery Charge
C6L Lockbolt 4.8mm (3/16''):
Approx.1200 PCS/ Battery Charge
C6L Lockbolt 6.4mm (1/4''):
Approx.700 PCS/ Battery Charge
Hemlok 7.8mm(5/16''):
Approx.700 PCS/ Battery Charge
Hemlok / monobolt / megna-lok:
6.4mm:
Approx.900 PCS/ Battery Charge

Model	Traction Power lbf(kgf)	Stroke Length inch(mm)	Battery (Charging Time)	Charger	Net Weight (without Battery) lbs(kgs)	Fastener Capacity
ZT3031BL	6744(3060)	1-7/32(31)	18V 4.0Ah (Approx. 110mins)	AC 100V~240V	5.25(2.38)	Huck Magna Grip 4.8mm (3/16'') 6.4mm (1/4'') C6L Lockbolt: 4.8mm (3/16'') 6.4mm (1/4'') Hemlok: 7.8mm (5/16'') Hemlok / monobolt / megna-lok: 6.4mm (1/4'')

Products and specifications subject to change without prior notice

Cordless Brushless Rivet Nut Tool

Features

- Brushless motor, longer duration.
- Suitable for M3-M12 all materials rivet nut and rivet nut studs.
- Convenient to use, auto spin on/ off and adjustable stroke.
- Intelligently records and displays the quantities of rivet nut or rivet stud used.
- ZRN2408BL also can compatible with MINOVA AC Adapter.

Accessories
- ZRN2408BL Handle
  (exclude any nose assemblies)
- Battery*2
- Charger
- Special Wrench
- High Quality Tool Box

ZRN2408BL
Cordless Brushless Rivet Nut Tool

Product Details

KD18BS
Match 18V
Bosch Battery

KD18MT
Match 18V
Makita Battery

KD18MW
Match 18V
Milwaukee Battery

Optional Battery Adapters

Riveting Datas(Stainless Steel Rivet Nuts)

M3 (6-32 UNC) (1900 PCS/ Battery)
M4 (8-32 UNC) (1700 PCS/ Battery)
M5 (10-24 UNC) (1500 PCS/ Battery)
M6 (1/4-20 UNC) (1300 PCS/ Battery)
M8 (5/16-18 UNC) (1000 PCS/ Battery)
M10 (3/8-16 UNC) (900 PCS/ Battery)
M12 (800 PCS/ Battery)

AC Power
Adapter Available

Rivet Nut

Rivet Nut Stud

Model	Traction Power lbf(kgf)	Stroke Length inch(mm)	Battery (Charging Time)	Charger	Net Weight (without Battery) lbs(kgs)	Mandrel Spec
ZRN2408BL	5395(2448)	5/16(8)	18V 2.0Ah (Approx. 55mins)	AC100V~240V	4.54(2.06)	M3, M4, M5, M6, M8, M10, M12

Cordless Drill With / Driver With Torque Control / Hammer Drill

Features

- Two-speed gearbox, adjustable speed.
- LED lighting work area.
- Ergonomic grip, soft grip.
- Forward and reverse mode.
- 20+1 torque adjustment, suitable for drilling and screwdrivers.

ZCD9112
Brushless Driver With Torque Control

ZCD9113
Brushless Drill With Torque Control

12V Li-Ion Battery

Charger

Model	Chuck Size inch(mm)	Max. Torque ft-lb(Nm)	Free Speed rpm	Torque Setting	Voltage DC
ZCD9112	3/8(10)	22.1(30)	L: 350 / H: 1250	20+1	12
ZCD9113	1/4(6)	22.1(30)	L: 350 / H: 1250	20+1	12

ZCHD9216
Brushless Hammer Drill
ZCHD9216-B
Brushless Hammer Drill-Bare Tool

Features

- Brushless motor, lightweight, more functions, longer use time.
- 20+1 stage torque adjustment.
- Auxiliary side handles increase convenience and safety.
- Continuously variable speed switch for better control.

All models supply with 2 pcs BT-DX0051 4.0Ah batteries, 1 pc CG-DX0030 charger in Blow Mold Case.

Model	Chuck Size inch(mm)	Max. Torque ft-lb(Nm)	Free Speed rpm	Torque Setting	Voltage DC	Net Weight lbs(kg)
ZCHD9216	1/2(13)	100(135)	L: 500 / H: 2000	20+1 with 3 functions	20	3.15(1.43)

Products and specifications subject to change without prior notice

ZCID9411 Brushless Impact Driver
ZCID9411-B Brushless Impact Driver-Bare Tool

Features

- Brushless EC motor, lightweight, more functions, longer use time.
- Four speed/torque selections.
- Intelligent speed adjustment mode to avoid overlocking.
- Compact size, lightweight, suitable for long-term operations.
- Continuously variable speed switch makes locking work easier to control.

All models supply with 2 pcs BT-DX0051 4.0Ah batteries, 1 pc CG-DX0030 charger in Blow Mold Case.

Model	Hex Collet inch(mm)	Max. Torque ft-lb(Nm)	Free Speed rpm	Impact Per Minute ipm	Voltage DC	L*W*H mm	Net Weight lbs(kg)
ZCID9411	1/4(6)	147(200)	L: 1000 / M: 2400 H: 3800 / S: 2750	2200	20	130*65*200	2.29(1.04)

ZAG9611 Brushless Angle Grinder
ZAG9611-B Brushless Angle Grinder-Bare Tool

Features

- Professional grade electronically controlled brushless motor.
- Intelligent control and adjustment, multiple protection design, extend tool life.
- Ergonomic handle design, lightweight and portable.
- Soft start design.
- Tool-free installation of protective cover, quick adjustment of angle.

All models supply with 2 pcs BT-DX0051 4.0Ah batteries, 1 pc CG-DX0030 charger in Blow Mold Case.

Model	Disk dia. inch(mm)	Disk hole dia. inch(mm)	Max cutting depth inch(mm)	No load speed rpm	Arbor Size	Dimension mm	Voltage DC	Weight with Li-ion battery pack lbs(kgs)
ZAG9611	5(125)	7/8(22.23)	1-1/8(29)	8000	5/8"-11(M14)	300x230x101	18	3.08(1.4)

ZCIW9562 Friction Ring Anvil 3/8" Brushless Impact wrench
ZCIW9562-B Friction Ring Anvil 3/8" Brushless Impact wrench-Bare Tool

Features

- Brushless motor delivers up to 400Nm of torque.
- 3 speed/torque selections.
- Smart reverse mode for loosening bolts/nuts, tool stops impact and rotation.
- Compact size, lightweight, suitable for long-term operations.
- Continuously variable speed switch makes locking work easier to control.

All models supply with 2 pcs BT-DX0051 4.0Ah batteries, 1 pc CG-DX0030 charger in Blow Mold Case.

Model	Hex Collet inch(mm)	Max. Torque ft-lb(Nm)	Free Speed rpm	Impact Per Minute ipm	Voltage DC	L*W*H mm	Net Weight lbs(kg)
ZCID9411	1/2(13)	295(400)	L: 1000 / M: 2200 H:3500 / Smart Reverse	L: 2000 / M: 3200 H: 4600	20	137*71*200	2.31(1.05) w/o battery

- Max. Bolt Diameter: M20

ZCIW9566 Friction Ring Anvil 1/2" Brushless High Torque Impact Wrench
ZCIW9566-B Friction Ring Anvil 1/2" Brushless High Torque Impact Wrench-Bare Tool
ZCIW9567 Friction Ring Anvil 3/4" Brushless High Torque Impact Wrench
ZCIW9567-B Friction Ring Anvil 3/4" Brushless High Torque Impact Wrench-Bare Tool

Features

- Professional-grade electronically controlled brushless motor for long service life.
- high torque wrench, 4-stage speed adjustment.
- Intelligent reverse mode, the tool will stop impact and rotation after the bolt/nut is loose.
- All-metal gearbox, high strength and long life.
- Continuously variable speed switch makes locking work easier to control.
- Excellent shock-absorbing design greatly improves durability.

All models supply with 2 pcs BT-DX0051 4.0Ah batteries, 1 pc CG-DX0030 charger in Blow Mold Case.

Model	Hex Collet inch(mm)	Max. Torque ft-lb(Nm)	Torque settings ft-lb(Nm)	Free Speed rpm	Impact Per Minute ipm	Voltage DC	L*W*H mm	Net Weight lbs(kg)
ZCIW9566	1/2(13)	737(1000)	Mode1: 74(100), Mode2: 221(300) Mode3: 516(700), Mode4: 737(1000) Mode5: Smart Reverse	1800	2400	20	235*85*203	6.38(2.9)
ZCIW9567	3/4(19)	782(1060)	Mode1: 78(106), Mode2: 236(320) Mode3: 546(740), Mode4: 782(1060) Mode5: Smart Reverse	1800	2400	20	235*85*203	6.5(2.95)

- Max. Bolt Diameter: M24

Products and specifications subject to change without prior notice

ZL-9151-B

20V 1000/2000Lm LED Work Light-Bare Tool

Features

- Compact size, removable and light weight.
- 180° tilt six position lamp head adjustment.
- USB port to charge mobile devices.
- Two brightness adjustment modes.

High Brightness | Portable | Cordless | Tilting Adjustment | Charging Port | Long Runtime

All model supplied bare, battery and charger need to purchase separately.

Model	Low output	High output	Color temp.	USB port output	Voltage DC	Weight with Li-ion battery pack lbs(kgs)
ZL-9151-B	1000 Lm, Battery run time 8Hours	2000 Lm, Battery run time 4Hours	6000K~7000K	5V/1A	20	3.86(1.75)

Features

- Soft grip provides the best protection from falling off.
- Robust bracket & structure protects battery cells and increases the cooling effect.
- Best cooling & ventilation design efferently reduce battery temperature.

Capacity Indicator | Short Circuit Protection | Overcharge Protection | One Playform | Total Protection | 20v

Optional

Li-ion Battery Pack	Description	Li-ion Battery Pack	Description	Li-ion Battery Pack	Description
BT-DX0030	20V 2.0Ah Li-ion	BT-DX0051	20V 4.0Ah Li-ion	BT-DX0054	20V 8.0Ah Li-ion
	Dimension		Dimension		Dimension
	120x80x50 mm		120x80x68 mm		145x80x78 mm
	Weight		Weight		Weight
	0.88 lbs(0.4 kgs)		1.54 lbs(0.7 kgs)		2.43 lbs(1.1 kgs)

Charger	Description	
CG-DX0030	Input: AC100~240V 50/60 Hz Output: DC 20V, Rated Output Current: 4A	
	Dimension	Weight
	180x490x520 mm	1.12 lbs(0.51 kgs)
Charger	**Description**	
CG-DX0031	Input: AC100~240V 50/60 Hz Output: DC 20V, Rated Output Current: 5A	
	Dimension	Weight
	180x490x520 mm	1.12 lbs(0.51 kgs)

Power cord (for charger use)

UL

VD

AS

UK

Part No.	Description	Weight
CG-DX0030-UL	for USA region	0.13lbs(62g)
CG-DX0030-VD	for Europe region	0.17lbs(79g)
CG-DX0030-AS	for Australia region	0.23lbs(105g)
CG-DX0030-UK	for England region	0.33lbs(151g)

- **CG-DX0030**: Battery Capacity 2.0Ah/40min, 4.0Ah/80min, 8.0Ah/160min
- **CG-DX0031**: Battery Capacity 2.0Ah/26min, 4.0Ah/48min, 8.0Ah/120min

LED Work Lights

ZL-9470W
15W COB LED
Work Light - White

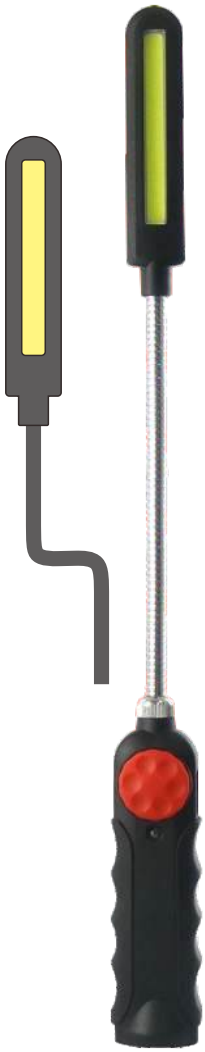

ZL-8800W
8W COB LED
Work Light - White

ZL-5800W
5W LED
Work Light - White

ZL-5641W
8W COB LED
Work Light - White

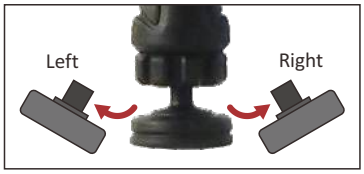

Rear end magnet
& rotatable device

HOOK

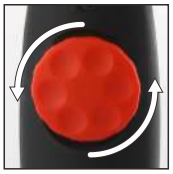

Adjustable
knob

USB
charging port

Model	Capacity of LED	Lighting up	Distance illumination of 50cm	Frequency	Lithium Battery	L*W*H mm	Net Weight lbs(g)
ZL-9470W	15W COB LED	2.5H(full light), 6H(micro light)	935 LUX / 458 LUM	50/60Hz	3.7V 2200mAh	375*45*35	0.44(200)
ZL-8800W	8W COB LED	2.5H(full light), 6H(micro light)	450 LUX / 280 LUM	50/60Hz	3.7V 2200mAh	445*38*33	0.5(226)
ZL-5800W	5W LED	2.5H(full light), 6H(micro light)	450 LUX / 260 LUM	50/60Hz	3.7V 2200mAh	380*38*33	0.51(230)
ZL-5641W	8W COB LED	2.5H(full light), 6H(micro light)	450 LUX / 318 LUM	50/60Hz	3.7V 2200mAh	210*26*28	0.28(127)

Products and specifications subject to change without prior notice

LED Work Lights

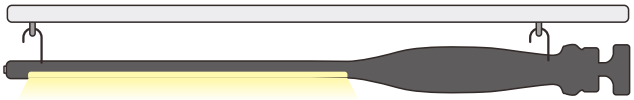

Front end hook

Rear end hook

Front end magnet

ZL-8740W
8W COB Light
3W LED TIP Light

- Use 8W light to make large area lighting.
- Use 3W lights for depth lighting.

ZL-8740WU
8W COB Light
3W LED Tip UV light

- Use 8W light to make large area lighting.
- Engine interior refrigerant detection by UV light.

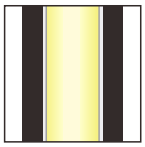

ZL-9880W
20W LED - White

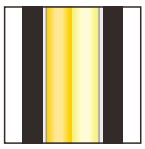

ZL-9880WY
Dual color 10W LED
- White & Yellow

- Single White color or Dual White & Yellow colors.
- Dual color model is perfect for car polishing inspection.
- Engine room lighting.

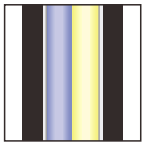

ZL-9880WU
Dual color 10W LED
- White & UV light

- Dual White color & UV light
- Engine interior refrigerant detection by UV light.
- Engine room lighting by white light.

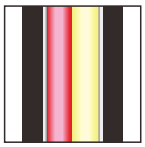

ZL-9880WR
Dual color 10W LED
- White & Red flashing light

- Dual White color & Red flashing light
- Red flashing warning light.

Adjustable knob

USB charging port

3W white or UV light with adjustable focal length

Back hook with magnet

Color switch for Dual color model

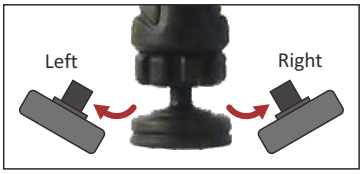

Rear end magnet & rotatable device

Light switch

Model	Capacity of LED	Lighting up	Distance illumination of 50cm	IP	Lithium Battery	L*W*H mm	Net Weight lbs(g)
ZL-9880W	20W	3.5H(full light), 6H(micro light)	880 LUM / 1300 LUX (White)	IP54	3.7V 3350mAh	475*50*42	0.62(280)
ZL-9880WY	10W	3.5H(full light), 6H(micro light)	620 LUM / 1000 LUX (White) 600 LUM / 950 LUX (Yellow)	IP54	3.7V 3350mAh	475*50*42	0.62(280)
ZL-9880WU	10W	3.5H(full light), 6H(micro light)	620 LUM / 1000 LUX (White)	IP54	3.7V 3350mAh	475*50*42	0.62(280)
ZL-9880WR	10W	3.5H(full light), 6H(micro light)	620 LUM / 1000 LUX (White) 142 LUM / 170 LUX (Red)	IP54	3.7V 3350mAh	475*50*42	0.62(280)
ZL-8740W	8W	3H	400 LUM (8W)	IP44	3.7V/2200mAh	230*30*40	0.32(145)
ZL-8740WU	8W	3H	400 LUM (8W)	IP44	3.7V/2200mAh	230*30*40	0.32(145)

- Yellow / white mixed light (ZL-9880WY): 770 LUM / 1400 LUX
- Frequency: 50/60Hz

Certified Cordless Screwdriver
Genius-3Ơ Series
According to ISO 5359, VDI / VDE 2647

Patented clutch system

- The latest patented two-stage clutch design, CMK high-precision locking.
- Over a million use lifespans.

Patented power-saving motor

- Brushless motor, maintenance-free.
- Patented motor with the latest technology, high performance and efficiency.

Ergonomic grip design

- Safe, special non-slip material grip.
- LED work light.
- Excellent sense of balance.

New board design

- fault display function. (optional software)

Battery

- High-capacity lithium battery: new lithium battery. (lightweight)
- Patented energy-saving mode: power-saving mode, normal mode, full-on mode, longer battery life and locking times.
- Long-lasting battery: 12.0V/4.0Ah

Certified Cordless Screwdriver Genius-3Ơ Series

According to ISO 5359, VDI / VDE 2647

Genius 3Ơ Series

The bits specification: 6.35 mm(1/4" Hex)
For Industrial Use.

Specification are subject to change without prior notice.

Model	Torque Range Nm	Idle Speed rpm	Voltage DC	Weight w/2.0Ah battery lbs(kgs)	CMK Value According to VDI 2647
ZBCP031600	0.8~3.0	600~1600	10.8	2.6(1.18)	CMK>2.2±10%
ZBCP051900	1.0~7.0	1000~1900	10.8	2.6(1.18)	CMK>2.2±10%
ZBCP061550	1.0~7.0	800~1550	10.8	2.6(1.18)	CMK>2.2±10%
ZBCP081100	1.0~10.0	700~1100	10.8	2.6(1.18)	CMK>2.2±10%
ZBCP101200	1.0~12.0	600~1200	10.8	2.6(1.18)	CMK>2.2±10%
ZBCP121000	5.0~15.0	500~1000	10.8	2.6(1.18)	CMK>2.2±10%

[Custom-made] Customized models available upon request. Please contact us for further information.

- New Patented Magnetic Levitation Motor
- Non-Vibration Bit Holder for A More Precise and Sensitive Tightening Process
- High Accuracy: CMK Value >2.2 ± 10%
- CMK Test Report Included(Dynamic)
- USB Interface for Parameter setting on Speed
- New PCB-Board: Diagnostic and Report

Optional

Li-ion Battery Pack	Description	Li-ion Battery Pack	Description
	12V 2.0Ah Li-ion		12V 4.0Ah Li-ion
	Dimension		**Dimension**
	120x80x50 mm		120x80x68 mm
	Weight		**Weight**
1M7530	0.584 lbs(0.265 kgs)	**1M7535**	0.97 lbs(0.44 kgs)

Charger

6C1001

Description
Input: 100~240 VAC, Charge Time: 60min

Power cord (for charger use)

CH002-02	**CH002-03**	**CH002-04**	**CH002-05**	**CH002-06**	**CH002-07**	**CH002-08**
for USA region	for India (Big) region	for Europe region	for UK region	for Australia region	for India (Small) region	for USA region

ECB18IM4300 Friction Ring Anvil 18V Cordless Torque Control Impact Wrench 300Nm - Kit
ECB18IM4300-B Friction Ring Anvil 18V Cordless Torque Control Impact Wrench 300Nm - Bare Tool

Features

- Brushless EC motor, compact, more functions, longer run time, service free.
- Torque selections after calibration provide precise torque control for a wide range of applications.
- Smart reverse mode is used when the bolt / nut is loosened, the tool stops impact and rotation, then slowly removes the bolt / nut.
- Variable motor output control.
- LED illuminates work area with 30 second delay after stopping the tool.
- Ergonomics slim handle with soft grip for comfortable use.
- Connect to PC or NB through Bluetooth to calibrate the controllable torque range of the tool.
- Adjustable torque control parameters (working time, bolt size, QC range, etc.)
- Fast target torque setting within the controllable torque range.
- Individual parameter storage for fast program reload to suit each application.
- Connect to PC or NB through Bluetooth to collect data.
- Connect to internet via software to upload data to the cloud server.

Kit model supply with 1 pc BT-DX0050 4.0Ah batteries, 1 pc CG-DX0030 charger in Blow Mold Case.

Model	Capacity inch(mm)	Max. Torque ft-lb(Nm)	Voltage DC	Weight with battery pack lbs(kgs)
ECB18IM4300	1/2(13)	221.3(300)	18	3.47(1.57) with 4.0Ah battery
ECB18IM4300-B	1/2(13)	221.3(300)	18	2.03(0.92) Bare Tool

ECB18IP41555 18V Cordless Torque Control Impulse Wrench 15~55Nm - Kit
ECB18IP41555-B 18V Cordless Torque Control Impulse Wrench 15~55Nm - Bare Tool

Features

- Brushless EC motor, compact, more functions, longer run time, service free.
- Torque selections after calibration provide precise torque control for a wide range of applications.
- Smart reverse mode is used when the bolt / nut is loosened, the tool stops impact and rotation, then slowly removes the bolt / nut.
- Variable motor output control.
- LED illuminates work area with 30 second delay after stopping the tool.
- Ergonomics slim handle with soft grip for comfortable use.
- Connect to PC or NB through Bluetooth to calibrate the controllable torque range of the tool.
- Adjustable torque control parameters (working time, bolt size, QC range, etc.)
- Fast target torque setting within the controllable torque range.
- Individual parameter storage for fast program reload to suit each application.
- Connect to PC or NB through Bluetooth to collect data.
- Connect to internet via software to upload data to the cloud server.

Kit model supply with 1 pc BT-DX0050 4.0Ah batteries, 1 pc CG-DX0030 charger in Blow Mold Case.

Model	Square Drive	Bolt Capacity mm	Measured on Hard Joint / ft-lb(Nm)				Weight with battery pack lbs(kgs)
			Max. Oil Pressure		Min. Oil Pressure		
			30% motor output	80% motor output	30% motor output	80% motor output	
ECB18IP41555	1/2" SD	M10~M12	11.1(15)	22.1(30)	22.1(30)	40.6(55)	4.35(1.97) with 4.0Ah battery
ECB18IP41555-B	1/2" SD	M10~M12	11.1(15)	22.1(30)	22.1(30)	40.6(55)	2.91(1.32)Bare Tool

Products and specifications subject to change without prior notice

Hyper Sander

Features

- Random orbital electric sander use advanced brushless DC motor technology, without the need for an external power transformer.
- High-abrasion electric sander with 5 mm sanding stroke, ideal for coarse and intermediate sanding with effective dust removal.
- Connect to multi-hole sanding discs with radial holes.
- Powerful, low-noise and maintenance-free direct drive through a brushless 350W EC motor.
- Sanders are vacuum-ready using multi-hole backing pads with hook and loop attachment.
- For effective and effortless dry sanding of wood, plastic and composite parts, drywall as well as paints, varnishes and fillers.
- Digitally controlled variable speeds from 4,000 to 10,000 rpm to provide the ideal finish for a variety of applications. Perfectly balanced center of gravity for effortless work.

NEW
PRODUCT

ZES-6DC

Brushless DC Sander - 5mm Orbit

Model	Orbital range mm	No load speed r/min	Frequency Hz	Input power W	Amperage A	Backing plate size mm	Dimension mm	Voltage V	Weight lbs(kgs)
ZES-6DC	5	4000~10000	50/60	350	3	150	310x110x150	120/220	2.43(1.1)

Industrial Vacuum Cleaner

Features

- Automatic syncs by both air tool and power tool.
- Lightweight and Powerful.
- Triple Filtration System.
- Light weight composite housing design.
- Use for both Electric & Air sanders.
- Two types startup control: manual or automatic startup.
- Speed adjustment for various sanding application.
- Ideal for wood furniture industry & automotive body shops.

ZVC5111ES
Industrial Vacuum Cleaner with Rack

Accessories

- 5M length vacuum & air hose set X 1
- Replaceable Filter X 1
- Dust collection bag X 1

ZVC5111E
Industrial Vacuum Cleaner

* Please specify the type of plug when ordering.

Model	Voltage	Power Consumption w	Max Vacuum mmH2O	Air Flow m³/min	Drum Capacity L	L*W*H mm	Net Weight lbs(kgs)
ZVC5111ES	220~240V	1200	2450	2.9	40	640*465*1290	54(24.5)
ZVC5111E	220~240V	1200	2450	2.9	40	640*465*500	35.3(16)

Products and specifications subject to change without prior notice

Universal Swivel Air Inlet Joint

ZIPP SWIVEL-360° Free-directional rotation air hose universal joints.

- The ZIPP SWIVEL is a patented, uniquely designed "Universal Swivel Air Inlet Joint" that connects portable air tools to an air line. it swivels 360° to allow the hose hanging straight down to the floor no matter how the tool is held.
- The ZIPP SWIVEL is available in 5 types covering most popular sizes of Air tools in the field for superior maneuverability while increasing operator comfort and productivity.
- It will increase the life of air hoses and inlet fitting as well.
- The ZIPP SWIVEL can be efficiently used on Air Drills, Grinders, Polishers, Sanders, Staplers, Spray Gun, etc. It **is applicable with percussive or impact tools.**
- All types can be attached with a miniature 1" air pressure gauge for checking the most precise dynamic working air pressure right at the tool inlet.
- Unique pressure relief valve available as an option to prevent the tool working under abnormal higher air pressure.

Air Pressure Gauge

To check if the air pressure apply to the tool is sufficient as specified, remove the plug screw on the Swivel and fit the pressure gage instead.

Fit the Swivel to the tool inlet Connect the air hose and pull the trigger to check if the dynamic air pressure is appropriate for the tool.

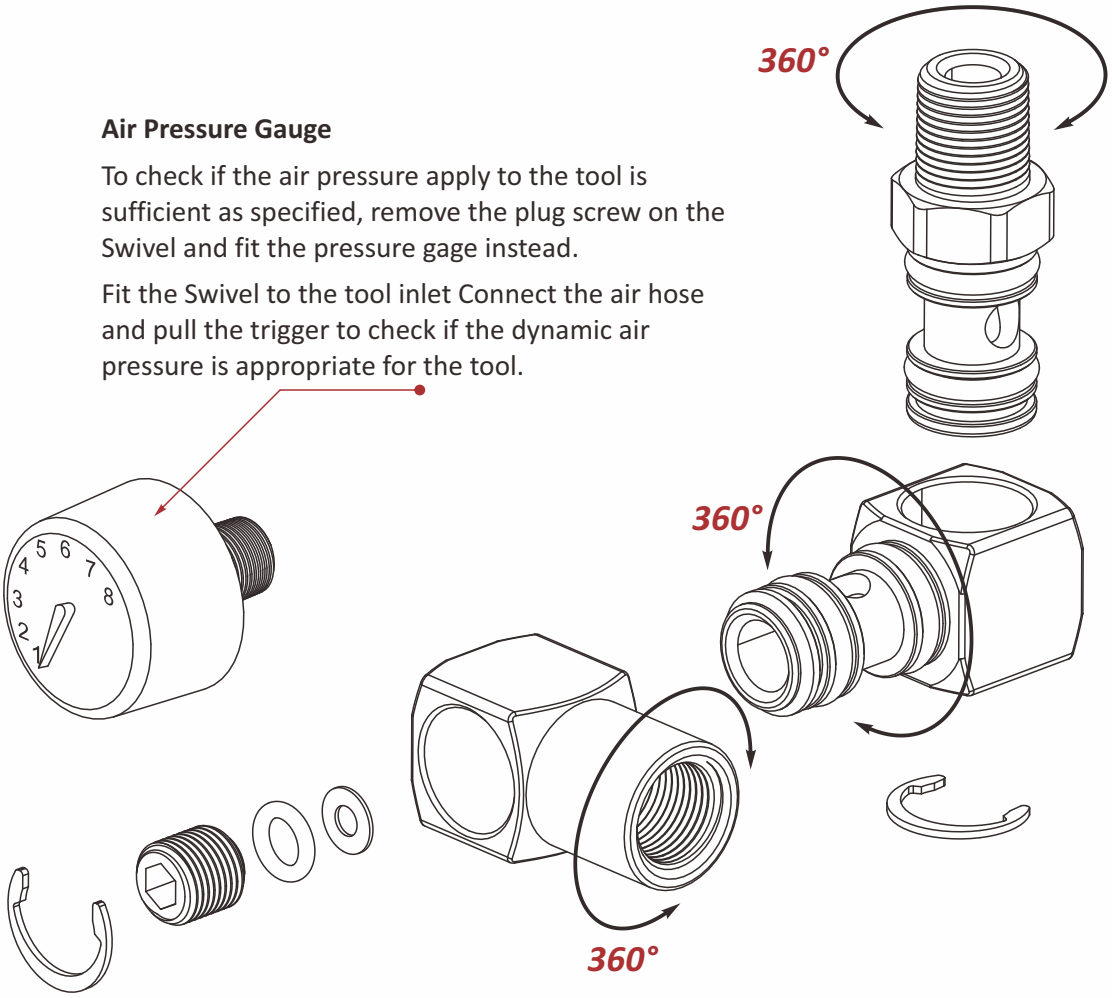

Patent pending in other countries

U.S.A.PAT.:
4,823,835

P.R.C.PAT.:
ZL 2006 2 0001776.6

Universal Swivel Air Inlet Joint

ZA-922P(K)
1/4" Swivel Joint Composite

ZA-922(K)
1/4" Swivel Joint-Alum.

ZA-933(K)
3/8" Swivel Joint-Alum.

ZA-944(K)
1/2" Swivel Joint-Alum.

ZA-92R2(K)
1/4" Swivel Joint
w/Regulator

ZA-92S2(K)
1/4" Swivel Joint-Alum.
w/Full Close type Regulator

KIT
ZA-9XX(K)
Affix (K) denotes
the Swivel Joint
Packed with
Pressure Gauge

CA-1025B
1/4" Mini Oiler

82R2
1/4" Air Regulator

- Male thread: 1/4" NPT/PT
- Female thread: 1/4" PF
- Hex O.D.: 22mm

CA-1037B
3/8" Mini Oiler

AG18
Pressure gauge

HN-G1
Digital Pressure gauge

ZA-5SG2
Pressure regulator w/gauge
3 units selectable:
psi, bar, Kpa

Features

- Proof pressure: 200 psi
- Burst pressure: 250 psi (5 SEC)
- Accuracy: ± 1.2 psi ± 1 digit @ 25°C
- Media: clean air or non-corrosive gases
- Display: LCD size: 11 x 21 mm
- Battery: 1.5V DC x 2, non changeable
- Battery life: 3 yrs (working 1 hour/day) ; 2500 hrs (continue working)
- User interface: On/Off and change unit
- Operating temperature: 0~45 °C (32~115 °F)
- Storage temperature: -10~60 °C (14~140 °F)
- Face label: Toluene be able to wipe
- HN-G1 digital pressure gauge: IP63
- Auto-offtime set: 90 (SEC)
- Pressure port: brass 1/8" NPT male

Model	Pipe Thread Size -Male NPT/PT	Pipe Thread Size -Female PF	Side Width J*: Hex mm	Side Width J*: SQ. mm	Air Flow Rate m^3/min	Material
ZA-922P	1/4	1/4	17	19	0-0.75	Nylon+GF+Teflon
ZA-922	1/4	1/4	17	19	0-0.75	Alum. Alloy & Steel
ZA-933	3/8	3/8	17	19	0-1.35	Alum. Alloy & Steel
ZA-944	1/2	1/2	22	25.4	0-1.95	Alum. Alloy & Steel
ZA-92R2	1/4	1/4	17	19	0-0.75	Alum. Alloy Brass & Steel
ZA-92S2	1/4	1/4	17	19	0-0.75	Alum. Alloy & Steel
82R2	1/4	1/4	22	–	0-0.75	Brass & Steel

Products and specifications subject to change without prior notice

Features

- Cost-efficient, practical and compact. It uses rotatory Adjusting Cover for easier tension adjustment without burden.
- Fast and convenient installation. In addition, anti-falling steel wire mounting holes are provided, which must be installed to avoid the failure of the original mounting location.
- The housing is made of rustproof iron shell. The steel wires and nylon ropes are available for option. Further, a ball-shape damper also can stop tool at a fixed height in its recover stroke.

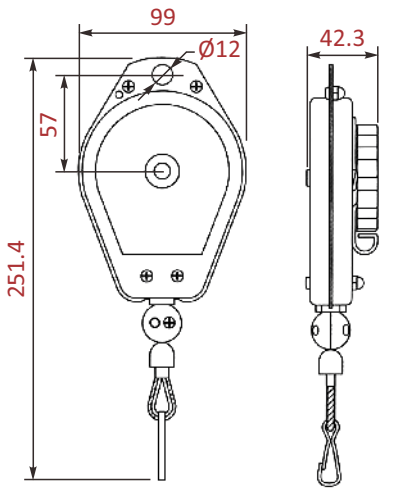

ZSB600 / ZSB1200 / ZSB2000
Spring Balancer

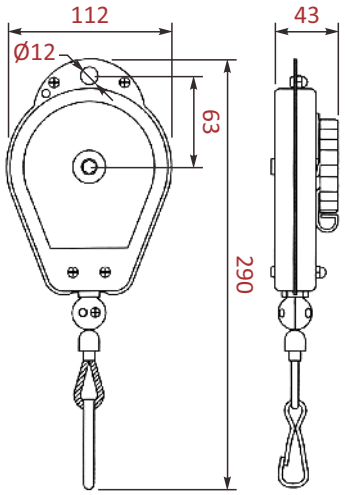

ZSB3000 / ZSB5000
Spring Balancer

Tension Adjust Cap

Model	Capacity kg	Travel m	Rope option	Rope Dia mm	Net Weight lbs(kgs)
ZSB600	0.3~0.8	1.4	Nylon/Cable	2.5	1.08(0.49)
ZSB1200	0.6~1.5	1.4	Nylon/Cable	2.5	1.15(0.52)
ZSB2000	1.0~2.0	1.4	Nylon/Cable	2.5	1.17(0.53)
ZSB3000	1.5~3.0	1.4	Cable	2.5	1.68(0.76)
ZSB5000	3.0~5.0	1.4	Cable	2.5	1.79(0.81)

ZHR-10
Spring Balancer

Features

- Adopt 8mm inner dia, PU Braided hose.

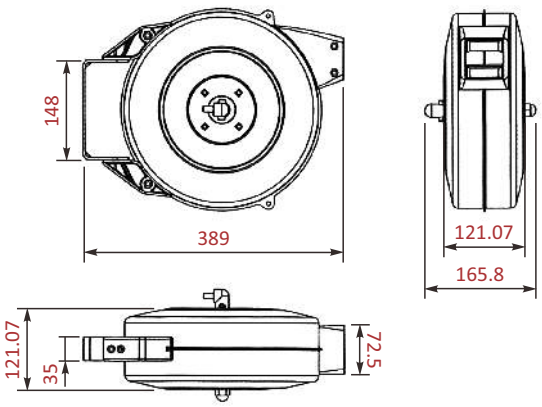

Model	Mox.pressare psi	Hose Length m	Hose Material	Hose Dia mm	Net Weight lbs(kgs)
ZHR-10	200	10	PU Braided	8*12	10.8(4.9)

Spring Balancer

Features

- Labor Saving: The spiral type outputs consistent suspension force.
- Productive: The user can easily drag the tool to where he wants and stop at easier access position to achieve smoother and more efficient operation.
- Efficient: The operator can handle the tool easily; thus, avoiding wasting time and consuming labor by lowering the tool and picking it again when taking the object at the same time.
- Cost-efficient: Rigid mechanism design makes the product more durable while bringing down the maintenance cost.
- Anti-Falling Device will lock the cable in case of spring breakage.

Tension Indicator

Tension Adjust by Worm Gear

Lock Spring Drum Position

360° Swivel Hanger

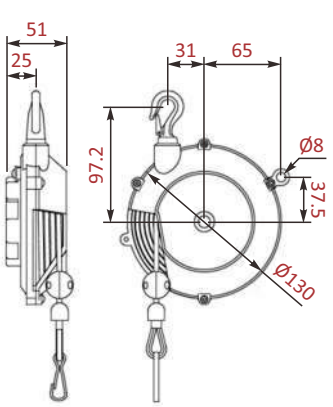

ZSB1500

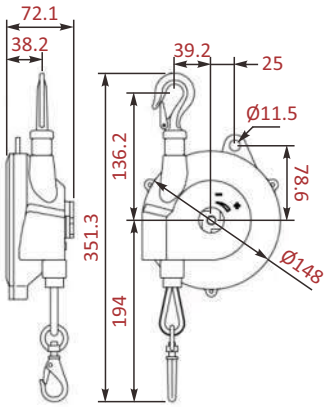

ZSB3K / ZSB5K / ZSB7K

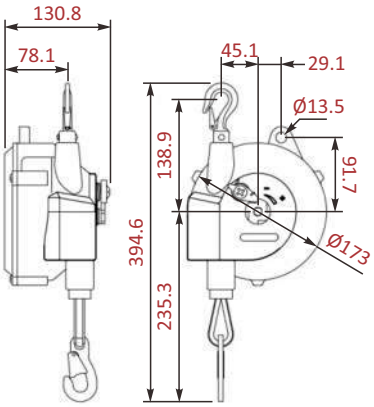

ZSB9K / ZSB15K

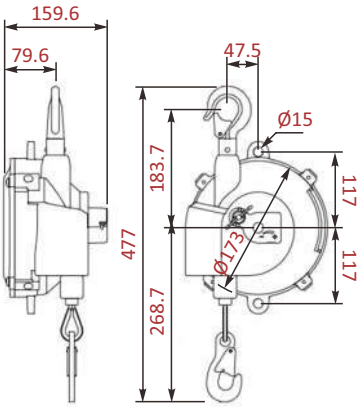

ZSB22K / ZSB30K

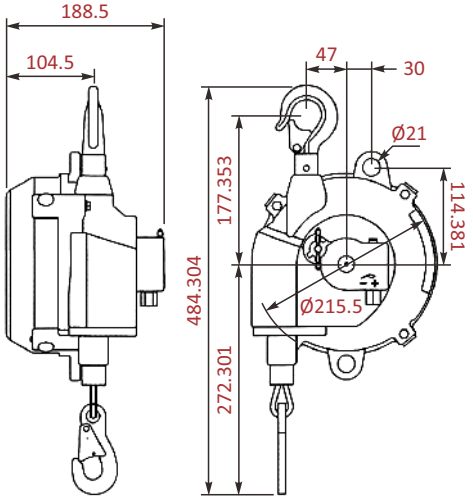

ZSB40K / ZSB50K

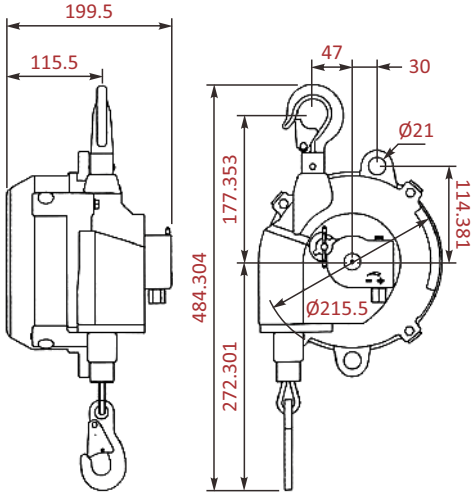

ZSB60K / ZSB70K

Model	Capacity kg	Travel m	Rope option	Rope Dia mm	Net Weight lbs(kgs)	Model	Capacity kg	Travel m	Rope option	Rope Dia mm	Net Weight lbs(kgs)
ZSB1500	0.1~1.5	1.3	Cable	2.0	1.61(0.73)	ZSB22K	15~22	1.5	Cable	4.8	16.98(7.7)
ZSB3K	1.5~3	1.3	Cable	3.2	3.81(1.73)	ZSB30K	22~30	1.5	Cable	4.8	18.3(8.3)
ZSB5K	3~5	1.3	Cable	3.2	4.01(1.82)	ZSB40K	30~40	1.5	Cable	4.8	21.4(9.7)
ZSB7K	5~7	1.3	Cable	3.2	4.08(1.85)	ZSB50K	40~50	1.5	Cable	4.8	22.3(10.1)
ZSB9K	5~9	1.3	Cable	4.0	7.91(3.59)	ZSB60K	50~60	1.5	Cable	4.8	24.5(11.1)
ZSB15K	9~15	1.3	Cable	4.0	7.96(3.61)	ZSB70K	60~70	1.5	Cable	4.8	25.1(11.4)

Products and specifications subject to change without prior notice

Features

- Adopting 8.0 mm inner diameter hose to provide enough air flow to air tool and equipment.
- It achieves neat and orderly production line for enhancing the working efficiency.
- Tool anti-falling device is provided in case of the spring breaking.
- The installation is fast and convenient with 360 degrees install hook.
- Worm gear provides more precise force adjustment.

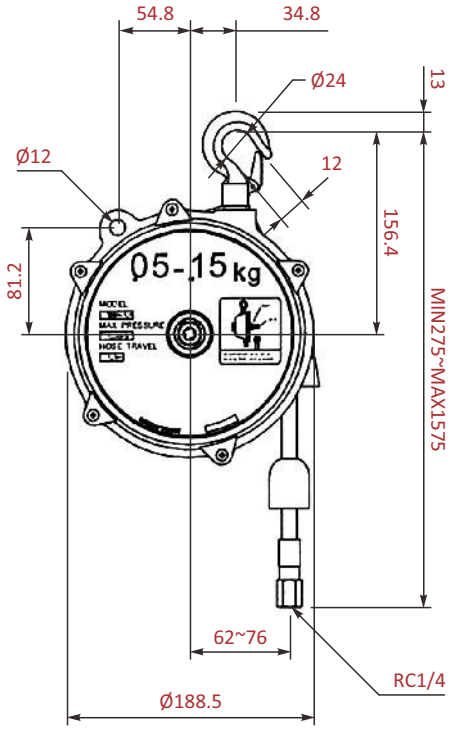

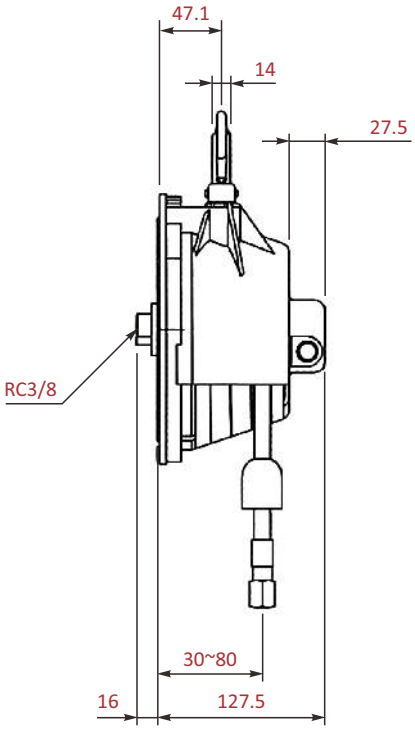

ZTHB15 / ZTHB25 / ZTHB35 / ZTHB50 / ZTHB65

Spring Balancer

Model	Capacity kg	Travel m	Hose Material	Hose Dia mm	Net Weight lbs(kgs)
ZTHB15	0.5~1.5	1.3	PU Braided	8*12	4.9(2.2)
ZTHB25	1.5~2.5	1.3	PU Braided	8*12	5.1(2.3)
ZTHB35	2.5~3.5	1.3	PU Braided	8*12	5.3(2.4)
ZTHB50	3.5~5.0	1.3	PU Braided	8*12	5.3(2.4)
ZTHB65	5.0~6.5	1.3	PU Braided	8*12	5.5(2.5)

F.R.L. Units / Auto Drain

ZC-130-3A
3/8" F.R.L. Unit

ZC-130-4A
1/2" F.R.L. Unit

ZD-130
Auto Drain

Model	Port size PT	Applied fluid	Max. pressure kgf/cm²(psi)	Range of pressure kgf/cm²	Filterable micron	Dropped flow l/minute	Ambient temperature °C	Lubrication method l/minute	Storage cc	Net Weight lbs(kgs)
ZC-130-3A	3/8	Air	10(140)	1.0~9.8	5~50	1250	5~50	30	120	6.39(2.9)
ZC-130-4A	1/2	Air	10(140)	1.0~9.8	5~50	1250	5~50	30	120	6.39(2.9)

- Discharge method: Auto discharge or Manual discharge.
- Recommended Lubricator Oil: VG-32 or OM-300A

Model	Air pressuse kgf/cm²	Drainage cc	Temperature °C	Inlet	Usage	Cleaner	Outlook mm	Net Weight lbs(kgs)
ZD-130	2~9	100	10~63	1/2	Air Filter, Air Dryer	Soft Solvent	110 x 240	2.9(1.3)

Air Supply System

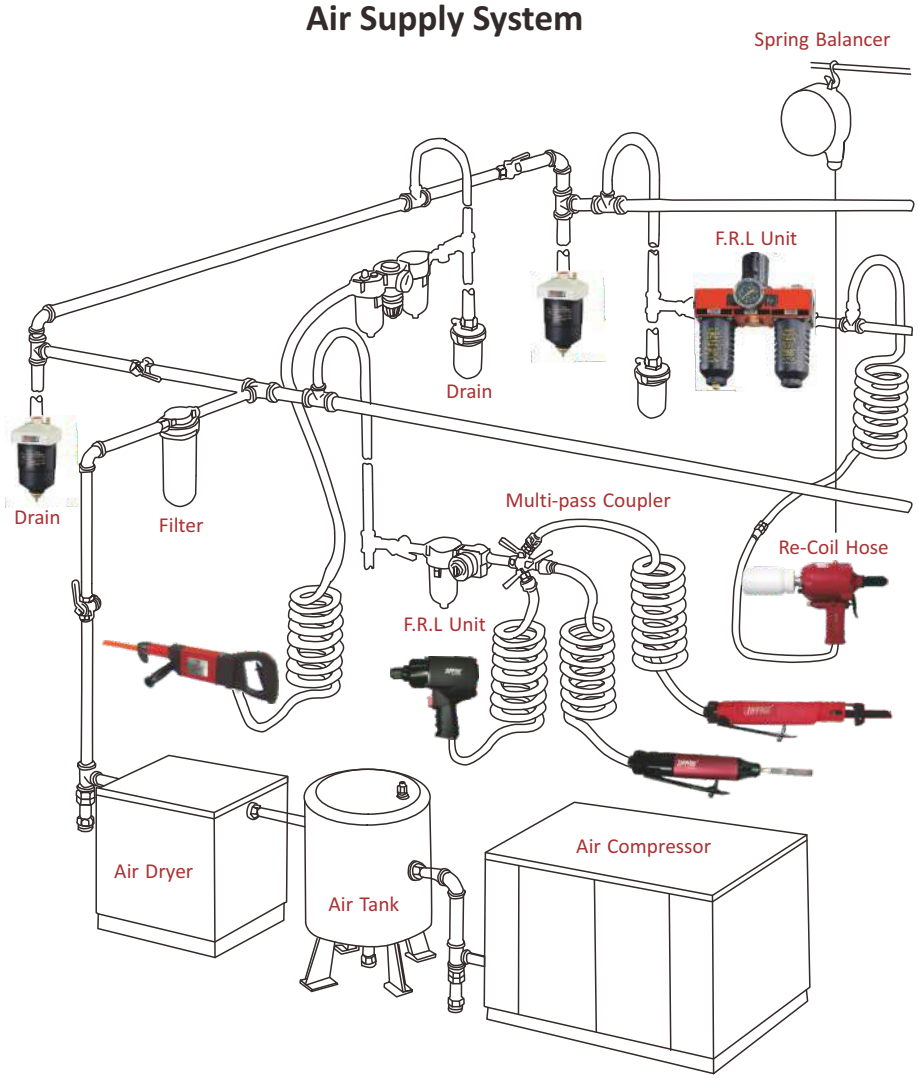

Products and specifications subject to change without prior notice

Display Stand

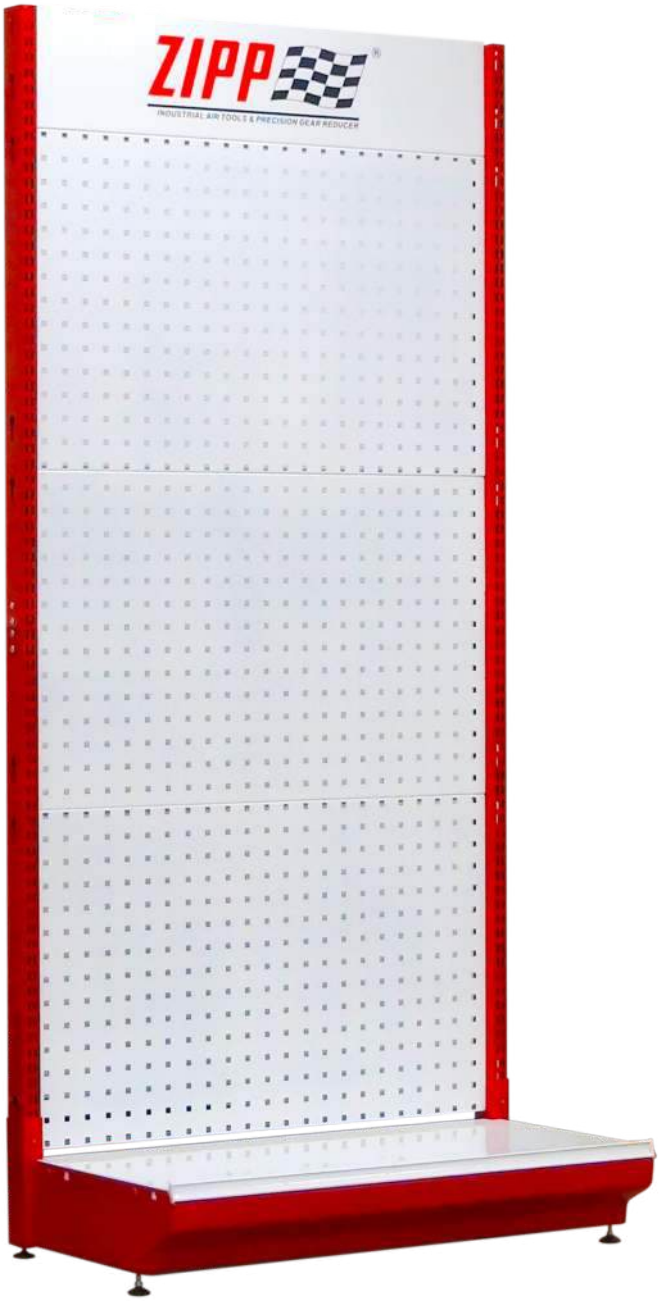

ZDS-2
Display Stand

ZSH-1
1" Single Hook

ZDH-1
1" Double Hook

ZSH-2
2" Single Hook

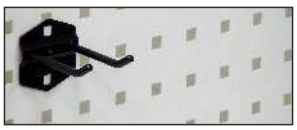

ZDH-2
2" Double Hook

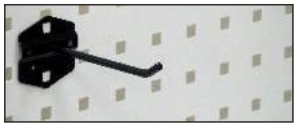

ZSH-4
4" Single Hook

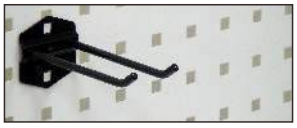

ZDH-4
4" Double Hook

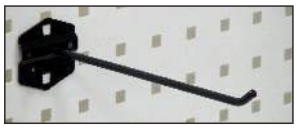

ZSH-8
8" Single Hook

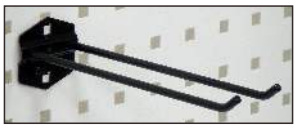

ZDH-8
8" Double Hook

ZUH-1
U Shape Hook

ZDS-1S
Up Shelf w/ Bracket

Model	Over all size			Packing		
	W inch(mm)	D inch(mm)	H inch(mm)	N.W. kgs	G.W. kgs	Cuft
ZDS-2	37.2(945)	19.3(490)	82.7(2100)	31.5	33	2.73'
ZDS-1S	35.8(910)	15(382)	7.9(20)	3.5	3.9	0.3'

MEMO

Products and specifications subject to change without prior notice

General Safety Guide

WARNING

Some dust created by power sanding, sawing, grinding, drilling, and other construction activities contains chemicals known to the public to cause cancer, birth defects or other reproductive harm.

Some products with high pressure system and the following safety precautions must be followed at all time along with any other existing safely rules.

1. Read all manuals included with each product carefully. Be thoroughly familiar with the controls and the proper use of the equipment.
2. Only persons well acquainted with these rules of safe operation should be allowed to use the air tool.
3. Do not exceed any pressure rating of any component in the system.

WARNING

Do NOT exceed the maximum operating pressure of the air tool (normally 90PSI).
The air tool could explode and result in death or serious injury.

4. Disconnect the air tool from air supply before changing tools or attachments and during non-operation.

WARNING

Always wear approved safety glasses with shields & hearing protection.

5. Do not wear loose fitting clothing or apparel which contains loose straps or ties, etc. which could become entangled in moving parts of the tool and results in serious personal injury.
6. Do not wear jewelry, watches, identifications, necklace. etc. when operating any tool, they may be caught in moving parts and result in serious injury.
7. Do not depress trigger when connecting the air supply hose.
8. Always use attachments designed for use with air powered tools. Do not use damaged or worn attachments.

WARNING

DO NOT use hand tool sockets. Use impact quality sockets only.

9. Never trigger the tool when not applied to a work object. Attachments must be securely attached.
   Loose attachments can cause serious injury.
10. Protect air lines from damage or puncture.
11. Never point an air tool at oneself or any other person. Serious injury could occur.
12. Check air hoses for weak or worn condition before each use. Make sure all connections are secure.
13. Keep all nuts, bolls and screws tight and ensure equipment is in safe working condition.
14. Do not put hands near or under moving parts.

WARNING

Do NOT misuse the product, excessive exposure to vibration, work in awkward position and repetitive work motion.

Maintenance

Air tools require lubrication throughout the lifetime of the tools. The air motor and bearing use compressed air to power the tool, due to the moisture of the compressed air will rust the air motor and other parts inside of the tools, therefore lubrication is required air daily. Failure to lubricate the air tool properly will dramatically shorten the life of the tool and will void the warranty.

WARNING

This air tool requires lubrication BEFORE initial use. also before and after each additional use.

To lubricate the air tool manually:

1. Remove any attachment on the drive of air tools such as sockets, chisels and etc.
2. Disconnect the tool from the air supply source, place the air inlet faces up.
3. Depress the trigger or throttle and place about 5 c.c. of air tool oil into the air inlet.
   (Depressing the trigger or throttle will help circulating oil in the motor.)
   NOTE:
   Use SAE #10 grade oil if air tool oil is not available.
   Keep out of the reach of children. If taken internally, do not induce vomiting, call a doctor immediately.
4. Connect the tool to air source, cover the exhaust end with a towel and run for about 20 to 30 seconds.

WARNING

Any excess oil in the motor is immediately expelled from the exhaust port. Always direct exhaust port away from people or objects.

www.zippgroup.com

Distributed By